STATE LIBRARY OF PENNSYLVANIA
3 0144 00299889 6

CLASS 662 BOOK C163

VOLUME 1

PENNSYLVANIA
STATE LIBRARY

Digitized by the Internet Archive
in 2019 with funding from
This project is made possible by a grant from the Institute of Museum and Library Services as administered by the Pennsylvania Department of Education through the Office of Commonwealth Libraries

https://archive.org/details/vol1journalofcan00cana

CANADIAN PEAT SOCIETY

Vol. 1 NOVEMBER, 1911 No. 1

JOURNAL

OF THE

CANADIAN PEAT SOCIETY

Published Quarterly by the Society

Subscription Price $1 per annum
Single Number, Twenty-five cents

OTTAWA, CANADA

(Copyright, Canada, 1911 by the Canadian Peat Society)

TABLE OF CONTENTS

		PAGE
1.	Address by Hon. Clifford Sifton, Chairman of the Commission of Conservation	3
2.	Power Production from Peat at the Government Fuel Testing plant, B. F. Haanel, B.Sc., Chief of Fuel Testing Division, Department of Mines	8
3.	The Dorchester Peat Briquetting Plant, J. McWilliam, M.D.	13
5.	The improved Anrep Machinery for the Manufacturing of Machine Peat, E. V. Moore, B.Sc., C.E.	14
4.	European Peat Societies, A. Anrep, Jr., Peat Expert, Mines Branch	23
6.	Proceedings at the First General Meeting	25
7.	Editorial	27
	Freight Rates on Peat Fuel	28
	The Newfoundland Peat Bounty Act	29
	Peat in Sweden in 1910.—Translation from Moorzeitschrift	30
	Operation of Government Fuel Plant at Alfred, 1911	33
	The Farnham Plant of Peat Industries, Limited	33
	Proposed Commercial peat plant at Alfred	33
	Kalamazoo Meeting of American Peat Society	34
	Peat for Power Production	35

PENNSYLVANIA
STATE LIBRARY

Journal of the
Canadian Peat Society

VOL. 1 NOVEMBER, 1911 No. 1

ADDRESS BY HON. CLIFFORD SIFTON

Chairman of the Commission of Conservation

At the AMERICAN PEAT SOCIETY'S CONVENTION, Evening Session

MONDAY, JULY 25th, 1910

THE PRESIDENT: We have been very fortunate indeed in securing the consent of Hon. Clifford Sifton, Chairman of the Conservation Commission, to address you and say a few words of welcome. (Applause.)

HON. MR. SIFTON: Mr. President, Ladies and Gentlemen: I have been asked to say a few words by way of addition to the welcome you have already received to the city of Ottawa. The city of Ottawa has a reputation for hospitality, and I trust its reputation has been lived up to by the reception you have received today. I may say further, that, while I have no claim to speak with any expert knowledge, when you have carried out your program and visited the work already begun under the direction of your President, Dr. Haanel, you will have come to the conclusion that the work done by him in connection with the study of the peat question has been of a practical and useful character. (Applause.)

I need not remark upon the nature of the program which has been prepared for your meeting, and the evidence it gives of a desire to make that meeting useful. It is characteristic of your President that when he takes up anything he does it with extreme thoroughness and care, and I doubt not that this characteristic will be in evidence in the conduct of your proceedings here.

I have been much interested, and I may say surprised as well, in glancing over the records of your Society, to learn of the extensive and systematic efforts which you have been making to solve the problem of making the most beneficial use of the great supply of fuel which we possess in the peat bogs of America. I have myself found that it very often happens in examining the proceedings of scientific or semi-scientific societies that it took most of the time to separate the wheat from the chaff, that is to find out what there was worth carrying away,

140831

but I have been convinced, in a cursory examination of your proceedings, that that labor was not necessary, for you apparently recognize that, while endeavoring, as you are, to solve an economic problem, it must be done in a practical way, and your proceedings therefore deal very properly with real facts in connection with the problem. Only real results are dealt with. This is eminently necessary in dealing with a problem which is in its nature altogether a practical one.

It is a matter of gratification that you have responded favorably to the invitation to hold your present meeting at the Capital City of Canada. The Government has, by sanctioning this invitation, indicated its appreciation of the importance of your work, and the holding of your meeting here cannot fail to reward the liberality of the Government by helping to diffuse more general knowledge throughout Canada of the present status of the peat question, as well as by arousing a more intelligent interest in that question.

Sometimes in Canada, as well as in the United States, we have been too prone to begin work of an experimental character without making a proper and thorough study of what has been done in other countries. I believe this has taken place in regard to the manufacture and exploitation of peat fuel and has led to considerable unnecessary loss of capital and energy. The conduct of such meetings as that which you are holding here is the best in fact, almost the only practical method of making generally available the exact facts of the position.

May I, as an onlooker, make a practical suggestion upon this point? My suggestion is that a competent committee should be formed at each of your annual meetings to frame a short practical statement embodying a summary of the position of the peat industry of the world, in the light of the latest facts available at the time of your meeting. Such a statement should contain exact information in the briefest possible form showing the number of peat plants in operation; methods employed; amount of product; approximate cost of production; use to which the product is put, and other similar information. If printed in your annual proceedings it would constitute a practical reference table on the subject which I venture to say would, as soon as it became known, be effective in circulating very many thousands of copies of your report in quarters where it would be of the greatest benefit.

Your society is working for the purpose of accomplishing an economic result. There are two questions which are immediately suggested in connection with the work and, which demand a definite answer.

First, Is the result itself worth the efforts that must be put forth to achieve it?

Second, Is there a reasonable probability of success?

First, is it worth while? As to this I imagine there can be no doubt. What is the object? It is to render available, as fuel, the immense peat bogs of North America. What does success in this effort mean? It means importing a very appreciable factor into the solution of the problem of light, heat and power which will make them more available to the people at large. That is stating the matter in a purely general way. I would like, however, to state it in a more particular way.

We, in Canada and the United States, have been living amid a bountiful supply of the natural resources of wealth. We have hardly known what it is to be in need of anything that is really necessary to existence. In this city of Ottawa, ever since its existence, there has been a constant struggle to get rid of the wastage of manufacturing which, in other situations, would have been of great commercial value. Ottawa is therefore a typically difficult place in which to get people to realize the value of fuel. Some of us who stand here were born upon farms, upon which, when fuel was required, it was only necessary to go out and cut it—the destruction of the tree in itself was regarded as adding value to the land from which it was cut.

We are, however, coming, if somewhat slowly, to a better realization of what these things mean and, among other questions, we are beginning to realize what the fuel problem means to great masses of people after the supply of timber has been so far depleted that cheap fuel is no longer available. In the great centers of population in the Northern United States and Canada—as it is soon to be in its present course of development—the mass of the population will be wage earners, living by their daily earnings and in a climate which, for at least four months of the year, requires a large amount of fuel for family use—cheap and abundant fuel is a necessity of existence.

There are districts in Canadian cities today where families are herded together with insufficient space for health and really civilized life, because of the cost of fuel in the winter, and this condition will tend to increase rather than diminish. The coal supply of the continent is measurably well known, and the conditions of its extraction and marketing are thoroughly well known. It may be safely said there will be no permanent reduction in the price of coal—rather is it reasonably certain that there will be a gradual but steady increase. That is a matter that will bear a good deal of thinking about. We say the price is so much, and with our comparatively few railways we have no possible prospect of seeing coal any cheaper —it will become higher, more expensive and more difficult for the man who earns $1.50 a day to educate his family and keep his house in such a condition as his family can live comfortably throughout the winter. We may get much heat from water power in some localities favored by nature, such as the neighborhood of the Ottawa River, but so far, the cost of development, maintenance and management does not encourage us to the belief that we shall be able to make the "White Coal" a poor man's fuel.

I want to read the only authoritative statement I know of about the coal supply. It is short and gives the facts succinctly. It is as follows:

"From the beginning of coal mining in this country (1814) to the close of 1907 there were mined nearly 7,000,000,000 (6,865,000,000) tons. Adding to this one-half additional, representing the waste in mining, gives a total of more than 10,000,000,000 tons taken from the supplies originally available.

"The rate of production has increased rapidly. The average increase from 1846 to the close of 1907 was 7.36 per cent. per annum, practically doubling

the production every ten years. There has, however, been a decreasing rate of increase in production when considered on a basis of twenty year averages, and Mr. Henry Gannett of the United States Geological Survey, on this basis estimates the easily accessible and available coal supplies, aggregating 1,400,000,000,000 tons, would be exhausted about the year 2027, and that the entire coal supply would be exhausted about the year 2050.

"As a practical matter it should be understood that coal production will not increase to a certain point and then cease, but that long before the time of exhaustion of supply has been approached there will come a gradual decline in annual production of coal owing to the increasing scarcity and cost. Already, the price of anthracite and some other coals is advancing because of exhaustion of thicker beds and increased cost of working.

"The adoption of more efficient methods in connection with the mining and utilization of coal, and the increasing use of water power and other substitutes for fuel in power development, will diminish the present increasing rate of consumption, and thereby extend the life of our coal supplies beyond the dates mentioned. On the other hand, it is expected that manufacturing will continue to grow more rapidly than population, and this will increase the rate of coal consumption for power purposes even more rapidly than for heating.

"The factors in the above estimates are sufficiently reliable to make it clear that without a serious lessening of the present rate of coal consumption, either through the extensive development of substitutes for it, long before the middle of the next century is reached the nation's supplies of available coal will be so largely depleted as to bring serious hardship and a curtailment of industry."

There is the conclusion arrived at, and it points to the importance, nay to the necessity of developing every other possible fuel substance, and I especially emphasize the feature of it which has reference to domestic fuel, to the importance of it to the population who have not yet reached the more expensive kind of fuel.

In Canada we have coal in Nova Scotia, Alberta, British Columbia—but between Alberta and the New Brunswick line, little coal of economic value, so far as known; but in those portions of the country where there is no coal, peat bogs abound. For instance, in Manitoba there is perhaps the greatest necessity for cheap fuel for the masses of the people, more than other people in Canada, because this is the coldest province. There is little wood there, but there are great peat bogs. I have seen railway banks burning for days and days at a time, and the time will come when these immense bogs at the door of the people of Winnipeg will be made available for use as domestic fuel. (Applause.)

Now, as coal becomes dearer, the difficulty and uncertainty of the supply, of which we have had very vivid experience in the past, becomes more accentuated, the importance of an alternative and substitute fuel will become more pressing. If, therefore, the great peat bogs of Canada can be successfully converted into a fuel which shall be, if not so desirable as Pennsylvania coal, yet a practical domestic fuel, substantially cheaper than wood or coal, and abundant and certain in

quantity, the boon thus conferred upon the future inhabitants of Canada and the Northern United States can hardly be over-estimated. (Applause.) It will literally mean life and happiness to millions of people.

Not so important in one sense, but yet of great significance economically, is the influence which peat may have upon the question of light and power. There are peat bogs giving abundance of raw material where there are no water powers. In such localities it will be a simple matter, by the establishment of such plants as that which has been built in Ottawa under the direction of the Department of Mines, to effectively and cheaply produce the light and power required for neighboring communities, and so take an important part in the economic organization of society.

Is it worth while to make the effort? Those of you who are engaged in the work as a matter of business will answer that question in a business way, but, to all of you let me say that there is no effort in connection with the material affairs of life which is so well worth while making, as that which, if successful, will permanently add to the comfort and happiness of great numbers of the people of our race.

It is an unfortunate fact that most of us, from the circumstances of our calling or occupation, are not able to do much which tends to better, in any great degree, the condition of others. The ideal life is that of those who, while following their own avocations, are at the same time laboring for the advancement of knowledge in some field, the cultivation of which tends to promote the elevation and the happiness of the human race. Such a life pursued with contentment, with enthusiasm, with a chivalrous and generous appreciation of the efforts of others, and with an earnest determination to bear as much of what Bacon so well calls "fruit," is the highest form of existence in our modern society.

As to the reasonable probability of success in ultimately effecting a complete solution of the problem of the utilization of peat fuel, while I have no title to speak with any expert knowledge I express myself with complete optimism. The difficulties to be overcome seem to me to be so slight in comparison with those which have been overcome in other fields, and the attendant benefits so large that I look upon success as not only probable but certain within a very few years.

I welcome you gentlemen as partners and coadjutors in the great work in which I am most deeply interested, the conservation and proper utilization of our Natural Resources.

I welcome you as a body of men engaged in the solution of a practical economic question which is fraught with most important consequences to great numbers of people.

I trust that your meeting will be most successful and that the interchange of thoughts and experiences will add materially to our knowledge upon the important subject which is to be the subject of your deliberations. (Loud Applause.)

THE PEAT PRODUCER GAS POWER PLANT AT THE GOVERNMENT FUEL TESTING STATION.

By B. F. Haanel, B.Sc.

Chief Engineer, Division of Fuel and Fuel Testing, Department of Mines, Canada.

Owing to alterations in the construction of the peat gas producer, now being made by the Körting Brothers of Hanover, Germany, the tests which have been made and are now under way are not complete. This paper, therefore, can only treat in a general manner of the production of power from peat in so far as it relates to the investigations made at the Fuel Testing Station.

The reasons and necessity for the establishment of a Fuel Testing Station, and the benefits which it is expected will accrue to those provinces which possess no coal deposits and consequently are dependent on foreign sources for their fuel for all purposes, by demonstrating a satisfactory and comparatively cheap method for the production of power from peat, lignite and the cheaper grades of the imported coals, have been many times stated, so that it will be unnecessary to reiterate them here.

While the Fuel Testing Station was originally erected for the purpose of demonstrating a commercial and economical method of generating power by the utilization of peat in a gas producer, the plant has been enlarged sufficiently to include the investigation of lignite and coal in the producer.

That part of the power plant in which peat is exclusively used consists of a 60 Horse Power Körting peat gas producer and gas engine with a direct connected 50 K.W. direct current generator. The load which it is desired to carry on the engine is regulated by means of a portable resistance stand capable of absorbing the full load of the generator.

The producer gas cleaning apparatus consists of a wet coke scrubber, tar filter and a dry scrubber. The engine is started by means of compressed air, which is supplied by a compressor driven by a 3 H.P.—a. c. motor, which charges into a receiver. A suction fan driven by a 1 H.P.—a.c. motor is provided for starting the producer.

Description of Producer.

The Körting peat gas producer, as originally installed, consists of a rectangular steel shell about 15 feet in height from the floor level by about 5x3 feet in horizontal section. Near the top, grates are provided on either side. These two entirely independent grates are separated by a space approximately 12x12 inches. Below the grates are chambers into which the ashes drop, and these ash chambers and the grates above are accessible through two doors. About 3 feet above the floor level there is a second grate with two ash pits, one on either side, access to which is provided by two doors as above. Directly above the grates near the top

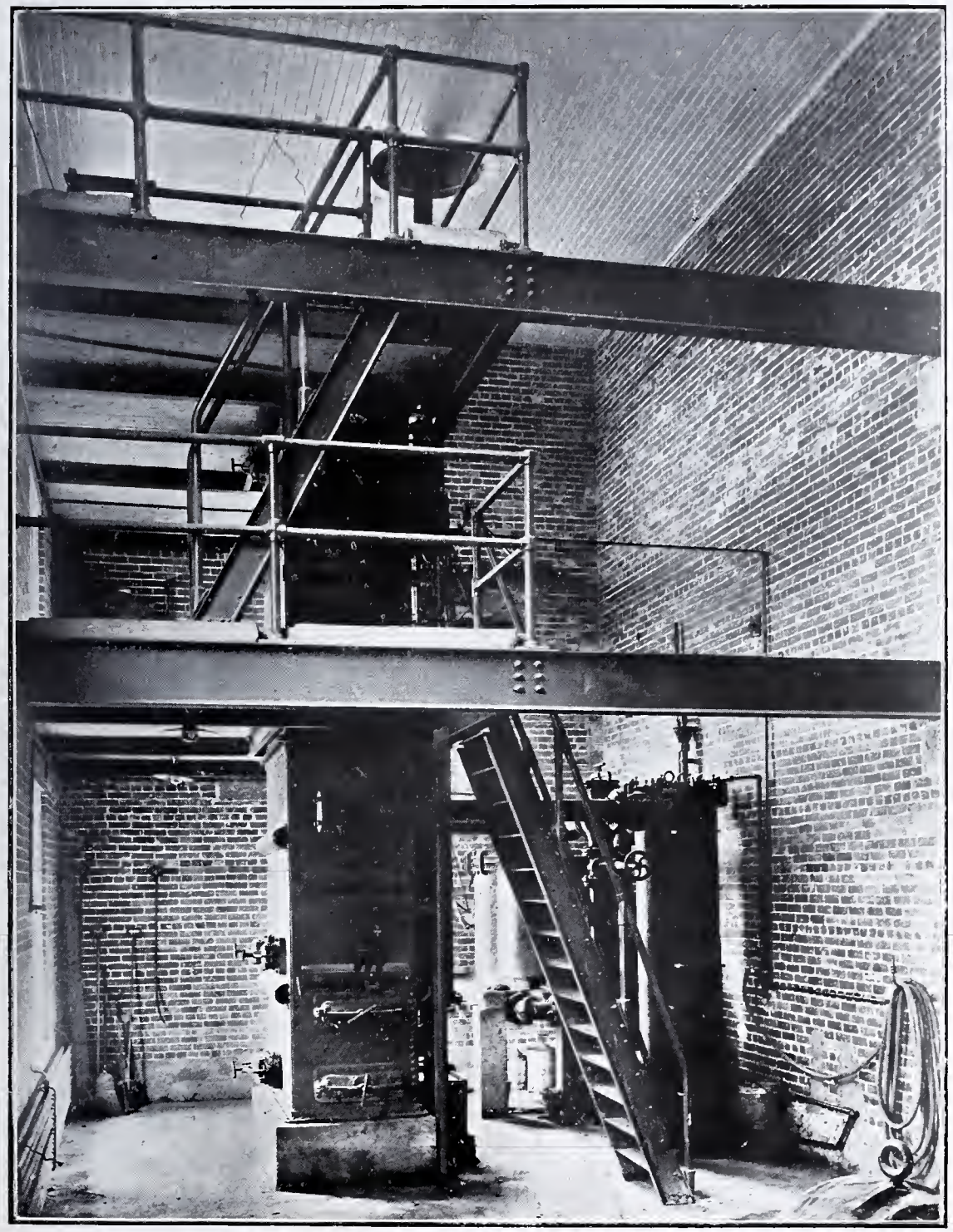

60 Horse Power Körting Peat Gas Producer at Government Fuel Testing Station, Ottawa Canada.

or upper zone, a cast iron chamber is provided. This chamber is connected by means of a water jacketed pipe to a similar chamber beneath the grates near the bottom of the producer. This is called the lower zone. These two chambers are provided with doors for the purpose of cleaning. In addition to the doors just described, there are two doors situated on the back of the producer just over the lower zone grate bars through which the fire can be poked or cleaned.

On top of the producer are two hoppers for feeding fuel to the two grates of the upper zone. The doors covering the ash pits of the upper and lower zones are provided with adjustable air openings. The lower end of the water jacketed pipe mentioned above, is submerged in a water seal.

The lining of the producer, which is made of the best quality of fire brick, conforms to the general shape of the producer for a distance of about four feet above the grate bars of the lower zone. From this point, the lining is jogged or stepped on the two narrow sides until the grate bars of the upper zone are reached, leaving a space of about 12x12 inches.

Principle of Operation.

The green peat containing about 30 per cent. moisture and a large amount of volatile matter is fed through the two hoppers described above, and is partially burned on the grates of the upper zone. The heat resulting from the combustion of peat is, or should be, just sufficient to drive off the moisture and volatile matter, leaving behind practically pure peat coke, which falls through the narrow opening below the upper grates into the lower zone where the final and complete combustion takes place.

In addition to the moisture and heavy hydrocarbon vapours driven off from the peat during the process of coking, the gases passing into the lower zone contain nitrogen, a small amount of carbon monoxide, carbon dioxide, and a trace of methane and ethylene.

When the producer is in condition for operation, the space between the grates of the lower and upper zones is filled with peat coke, the lower layer of which, for a height of about eighteen inches above the lower grates, is incandescent owing to the combustion of the coke on these grates

The gases, heavy hydrocarbon vapours and moisture evolved from the combustion of peat in the upper zone, are drawn up (by means of the suction of the fan or engine) into the gas chamber above the grates of the upper zone, previously described, into and down through the water cooled pipe into the chamber beneath the grates of the lower zone and then up through the bed of incandescent peat coke to the two off takes on either side of the producer to the cleaning system and engine.

A small quantity of the heavy hydrocarbon vapours and possibly some of the moisture is condensed on the walls of the water cooled pipe and drops into the water seal below, where the resulting tar can readily be removed.

The gases of the upper zone and the remainder of the hydrocarbon vapours and moisture now pass through the incandescent coke of the lower zone. Here the hydrocarbon vapours admitted into the lower zone together with the moisture (steam) and air admitted through the air openings in the ash pit doors, in passing through the hot carbon either burn, or are split up into permanent combustible gases. The moisture is reacted upon by the hot carbon. The result of this reaction is free hydrogen and either carbon monoxide or carbon dioxide. The carbon dioxide, evolved in the upper zone, is reduced to carbon monoxide. The final gas consists of a large quantity (by volume) of nitrogen, carbon monoxide and smaller quantities of carbon dioxide, hydrogen, methane and ethylene.

The Cleaning System.

As previously mentioned, the cleaning system consists of a wet coke scrubber, tar filter and dry scrubber.

The wet coke scrubber consists of a cylindrical, steel shell about 6 feet in height by 2½ feet in diameter, closed at the top by an air tight cover and at the bottom by a water seal. This shell is filled for a height of about 3 feet with coke. When in operation, this coke is continuously sprayed with cold water. The final gas leaving the producer enters the scrubber near the bottom and leaves near the top. In passing up through the wet coke and water spray, the gas is cooled and most of the dust and a large quantity of tarry matter, which escaped decomposition in the producer, is removed.

From the wet coke scrubber, the gas passes through the tar filter. This filter consists of a cast iron box about 3 feet in height , and 3 feet by 6 inches in horizontal section. Inside this box are fixed a number of baffle plates and four perforated metal plates which are placed near the outlet. These plates can be sprayed with hot water when the suction on the system indicates that the filter is clogged. The gas enters at one end of the filter and passes in and out among the baffle plates and through the perforated metal plates and then into the dry scrubber. Most of the tarry matter carried with the gas past the coke scrubber is removed in this filter and flows off with the wash water into the seal. The dry scrubber is a cylindrical steel shell about 4 feet in diameter by about 3 feet in height, closed on the top and bottom. The top cover can be removed. This shell is packed with excelsior through which the gas must pass before entering the engine. Free moisture and some tarry matter is removed from the gas in its passage through the scrubber.

Results of Tests.

Several tests have been made with the peat manufactured at the Victoria Road peat bog, and with that manufactured at the Government peat plant at Alfred.

In these tests, peat with varying quantities of moisture were used, the lowest quantity being 15 per cent. and the highest about 43 per cent. Since the pro-

ducer is designed to operate with peat containing from 25 to 30 per cent. water and is therefore not provided with an evaporator for supplying steam (which is absolutely necessary when running on dry fuels), 15 per cent. moisture peat was found to be too low for satisfactory operation owing to the high temperature prevailing in the producer and of the final gas,—thus lowering the thermal efficiency,—and the formation of some tar.

While peat containing moisture up to about 40 per cent. can be used by operating the plant at half load, the most satisfactory moisture content was found to be about 25 to 30 per cent.

Any tar which may be formed and find its way past the cleaning system into the admission valve and cylinder of the engine can be easily removed while the engine is running, by injecting into the open end of the cylinder a mixture of oil-soap and water. Tar resulting from the distillation of peat is readily soluble in such a mixture and in this respect differs from coal tar.

Fuel Consumption.

The average fuel consumption per B.H.P.H. at full load (60 H.P.) was found from many tests to be from 2¼ to 2½ lbs.

For one Brake Horse Power year of 3,000 hours (300 ten-hour days), this would amount to 3·75 tons.

For the purpose of showing the saving in fuel costs, which can be realized by generating power from peat in the peat producer gas plant, the following comparisons are given.

In estimating the following costs, the cost of one ton (2,000 lbs.) of machined peat, at the bog where the producer-gas plant is assumed to be situated, is taken at $2.00. The cost of a ton of soft coal is assumed to be $4.00 in car-load lots, f.o.b. At some points this price would be less, while at others it would be considerably higher.

The consumption of peat per brake horse power hour is assumed to be 2½ lbs.; lower fuel consumptions have been obtained, but the writer desires to use a conservative figure.

The fuel consumption per brake horse power hour of the coal producer gas plant is taken at 1½ lbs., and that of the steam plant at 6 lbs. The latter figure relates only to comparatively small plants.

On this basis, the fuel costs per brake horse power year (3,000 hours) would be as follows:—

	Fuel, Cost per Brake Horse Power. Year.
Peat producer gas plant, peat at $2.00 per ton.....	$7.50
Coal " " " coal at 4.00 "	9.00
Steam plant " 4.00 "	36.00

When peat is manufactured on a larger scale with machines provided with mechanical excavators and other labour saving devices, the above cost ($2.00) per ton will be very greatly reduced, so that a power plant situated at the bog will be able to show a much greater saving in fuel costs over that of a coal producer gas plant or steam plant.

In order to arrive at the saving, which will be effected by the utilization of either peat or coal in a producer gas power plant over that of a steam power plant, it is not necessary to estimate the operating costs and fixed charges since these will remain about the same for all the plants in question. A slight saving will, however, be realized in the peat producer gas plant, over the steam and even the bituminous coal producer gas plant, in the operating costs, since the peat producer gas plant is very easily handled, the producer practically taking care of itself. Hence, one man, an engineer at moderate wages, can easily take care of a 100 H.P. plant. While this is true in a general sense, the writer has seen a 150 H.P. bituminous coal producer plant handled entirely by one man, but such cases are not common. A bituminous coal producer is more difficult to operate and requires more or less constant attention, and therefore for proper working should have the services of a stoker. A steam plant of like capacity would require a fireman in addition to the engineer. In short, a peat producer gas power plant, in its simplicity and ease of operation, is not unlike an anthracite producer gas plant, which is recognized as the simplest of all such plants.

While hydro-electric energy is in many sections of those provinces possessing water powers, the cheapest power available, and for many purposes the most suitable, it must be borne in mind that there is a limit to which electric energy can be economically transmitted, since the cost of power increases rapidly with the length of the transmission line. In addition, there are localities which cannot be served by such transmission lines and still others to which such power is not suitable—for example, those requiring a 10-hour or intermittent service. For such districts, it is manifestly cheaper and more satisfactory to develop power independently by some other means, and it is hoped that producer gas power plants erected on a few wisely chosen bogs will serve this purpose.

The demonstration plant at Alfred and the Peat Producer Gas Power Plant erected in the Fuel Testing Station at Ottawa (the former serving to demonstrate a commercial process for the manufacture of a cheap fuel from peat and the latter serving to demonstrate an entirely commercial, economical and reliable method of generating power from such fuel), will, it is hoped, prove instrumental in:—

1. The development of such of the peat bogs found in the provinces of Ontario and Quebec, as are suitable for the manufacture of peat fuel, along sane and commercially profitable lines.

2. The establishment of power plants on the bogs, which will serve existing towns and cities with electric light and power, and attract industries to those parts of the above provinces which can be economically and satisfactorily served by such power.

THE DORCHESTER PLANT FOR MANUFACTURE OF PEAT BRIQUETTES.

Dr. J. McWilliam, London, Ont.

During the summer of 1905, W. A. Milne & Sons, of Hamilton, Ont., installed a plant for collecting and briquetting peat at Dorchester, for Dr. J. McWilliam, of London.

A description of the machines has already been given in several reports, and need not be repeated here except very briefly.

By our process, the surface of the bog is first cleared of green moss and timber and stumps, then it is harrowed and the surface dries by the sun and wind. Of course, shallow ditches have to be dug to carry off the surface water if there is any. It has been found that a field of harrowed peat exposed to the sun and wind on a fair day, will dry down to 25% to 30% in two hours to a depth of a quarter to a half inch. Our collector is then passed over the dried surface, and by the action of a vacuum fan the dry peat is sucked up and stored in a dump car and conveyed to a store house. This part of the process has always been a pronounced success, the collector working well, and at a low cost per ton of the collected material.

The next step is to dry the collected peat dust down from 25% to 5% to 8% moisture. To do this cheaply and rapidly has been found very difficult. Various plans of driers have been experimented with, and while the promoters cannot announce complete success, they have every reason to believe that the steam-plate drier now being installed will do the work cheaply and rapidly. It is intended that the new drier will be at work by June 1st of this year.

The next operation is to compress the fully dried dust into briquettes. When the drier provided properly dried and heated dust the press has been most satisfactory, giving a hard block which ships well and burns well, and is in much favor with people who have burned it. Many people use it entirely when they can get it, and many assert that it is cheaper and better than wood or coal. Some have compared it with hard coal by actual experiment, and found that it lasted as long as coal. A man heated his house with a single stove—a cooking range fitted to burn hard coal. He found a ton of coal lasted 20 days, while a ton of peat briquettes lasted 21½ days, and had all the good points of coal. He had always a warm house all night, had a fire in the morning which was much easier to get going when low; could boil water much quicker in the morning with peat than with coal, and in point of cleanliness, it was at least the equal of coal, and his experience was also that of many others.

About 1,200 tons have been sold during the six seasons of experiment, and the promoters expect by improved machines to greatly increase the output for this season.

Working as an experiment it is impossible to estimate the cost of production per ton by this method, but the promoters feel confident that they can produce it as cheaply as by any other method, and in a few seasons can make it at a good profit. The price obtained for it would average $4.50 per ton at the factory.

To encourage work so necessary to the welfare of the people of Canada, it is the opinion of the promoters who know the situation well, and the extreme difficulties of solving the problem of drying in an economical way, that the Canadian government should grant a good liberal bonus to workers in this industry, making the bonus very high at first, and to be reduced every five years or removed altogether when it was found that the peat industry was self-sustaining, which, we believe, would not be long if more capital and better engineering skill could be got to enter the field, and in our opinion nothing would so soon attract the attention of capitalists and mechanical skill as a good liberal bonus offered by the Government.

NOTE.—Under date of October 16th, Dr. McWilliam writes: "Owing to our new dryer being too weakly constructed, our output is going to be limited, but we will be ready for next season, and will still make a good deal this season."

THE IMPROVED ANREP MACHINERY FOR THE MANUFACTURE OF MACHINE PEAT.

Written for the Canadian Peat Society, March, 1911, by ERNEST V. MOORE, B. Sc., A. M. Can. Soc. C. E., Mining Engineer.

It is probable that few people will attend the first Annual Meeting of the Canadian Peat Society that are not more or less familar with the process of making Machine Peat. Nevertheless, a short description of the process itself with more particular reference to those operations that are distinctly Anrep, may be interesting at the present time.

The operation of manufacturing Machine Peat Fuel does not belong alone to Mr. Anrep. It is a development to which many talented men have given much time and not a very few valuable devices, and it consists in the following very simple series of operations.

Granted that a suitable bog has been procured: First, it must be drained; Second, a drying area must be prepared on its surface; Third, means must be provided to excavate the raw material; Fourth, this must be macerated and puddled into a homogeneous mass; Fifth, this mass must be spread in an even layer over the drying field; Sixth, it is here cut into convenient sized blocks and is allowed to dry, exposed to the weather; Seventh, during this part of the operation it is usually necessary to turn the blocks over once or twice; and Eighth, when sufficiently dry it is taken in the form of fuel, fit for use, into a storehouse or on to the cars.

Before going into detail with regard to these operations, it is desired to point out that this process is simply one of moving so many cubic yards of material so many times, operations about which there is neither mystery nor difficulty, either technical, mechanical, or commercial, and it is for this reason that the introduction of the manufacture of Machine Peat Fuel into this country, to replace the various processes in which artificial drying and briquetting have been attempted, will, we believe, in a very short time, put the peat fuel industry on a profitable commercial basis, in Canada. The entire credit for this very sensible movement, that is, the demonstration of the possibilities of this Machine Peat Fuel manufacture, is due to Dr. Haanel, of the Department of Mines, and no one can realize so well as the men who have been actively associated with the earlier attempts to make peat fuel in this country, how great this service has been, not only to the peat men, but also to the country at large.

The Anrep Process, as distinct from any other method of making machine peat, of which there are many, refers particularly to operations 3, 4, 5 and 6, just detailed, and consists in performing these operations with devices he has invented.

His first work was in connection with the macerating machine, the one device in the whole operation that is peculiar to peat. In August, 1883, the Russian government held a severe international competition on the Bissereva bog near Moscow, in which practically all the well known machines were entered. Anrep alone received the highest award and since then his macerating machine, improved fom time to time, has held first place in the industry. A report by Larson and Wallgren, to the Swedish government, showed one thousand Anrep machines in operation in Russia, in 1900, and even Lieut. Ekelund uses an Anrep macerator in the plant with which he obtained such promising results last year. Its efficiency simplicity, strength compared to weight, and accessibility are all noticeable, and compare favorably with other machines in the market.

The Anrep machine is, then, the basis of the Anrep process, and following this came his system of cable transportation on a round track. This is altogether Mr. Anrep's invention, and is the second device in his process. Originally the peat pulp was moulded from the spout of the peat mill on to boards, and these were pushed by hand out to the drying field on skeleton cars travelling on portable track, which was shifted from time to time as was necessary. The moulded peat was then dumped from the boards onto the bog surface and the empty boards taken back.

This cable transportation opened up a further development, in that the peat pulp was taken to the drying field in bulk, and there spreading and moulding were combined in the Jackobsson field press, completing the Anrep process as illustrated at Alfred.

Recently, Mr. Anrep has patented a number of further improvements in that he has introduced, most important of all, an automatic excavator. He has also improved the macerating device and his cable transportation, and offers a new spreading device of his own design, calculated to handle double or treble the output at Alfred, and which also has a simple automatic device to cross cut the peat.

The object of this paper is to more particularly describe these improvements, and to give some general information regarding their installation and operation, and a summary of the results to be obtained.

A suitable bog consists of a peat deposit that first of all is of such quality as will make good fuel, and second, and equally important to this process, that is capable, at least, of surface drainage. It is essential that two, or better still three, feet of natural drainage be possible, and of course, it is more desirable if the bog can be drained to the bottom. The working face must be comparatively dry, but all other conditions being favorable, the pit from which the raw material is being taken may economically be kept unwatered, by pumping, and, as it is equally desirable to have the working area flooded in winter time to prevent the action of frost, the condition of too complete drainage is not an unmixed benefit.

The drying area is easily prepared, in that it is only necessary to remove the brush, stumps, and other obstructions, and generally to bring the surface to a uniform level. On some bogs practically no work at all is necessary, while on others, particularly those covered by heavy brush and small trees, considerable effort may have to be expended.

The bog being thus prepared the next step is to provide machinery for the three operations; excavating, macerating and spreading.

Until comparatively recently the first of these has been done by hand. It has been admitted that it is desirable to excavate automatically, but cheap labor in Europe lessened the necessity for such an innovation there, and it has been claimed from time to time that no excavator would work satisfactorily on account of the roots, etc., to be encountered. During 1910, however, three distinct successes have been demonstrated, by Lieut. Ekelund, in Sweden, by the Canada Fertilizer Co., in Quebec, and by the Peat Engineering Co., of Toledo, Ohio. Ekelund, because of a perfectly drained bog, with a hard gravel bottom, was able to introduce a heavy clay and gravel bucket excavator, with which he obtained some very remarkable results, in that, by the use of this device and working on a comparatively large scale, he was able to cut former costs practically in half. His device permitted his digging around the roots and leaving the way clear for a workman to remove them out of the way. As at present constructed, his excavator is adaptable only to bogs of very special formation, in fact, only to such deposits as would permit equally well of the use of a steam shovel.

The excavator of the Canada Fertilizer Co., is a much lighter contrivance, designed particularly for peat, and considered, separately from the device in which it is incorporated, is a distinct improvement on Ekelund, as it is light, and yet very strong. No provision is made to pick out the roots, the idea there incorporated being to put everything through the macerator, the excavator being strong enough to break up and tear to pieces almost any obstruction it encounters in the bog. This, however, although doing away with the labor of picking out the roots, is undesirable, as the fewer undecomposed roots, no matter how finely they may be cut up, the better the finished product. This excavator easily did the work of 12 to 14

men, with an expenditure of not over 10 horse power. As the objections and difficulties to be met with in its use are being taken up in another page, there is no need of dealing with them here.

The Peat Engineering Co. have an entirely new idea in their worm excavator, which again works on the principle of eating up everything, no matter how large or solid, it comes in contact with. It has only had an experimental trial thus far, but mounted as it is, it is open to the same objections as the Canada Fertilizer Co. device, although it appears to be both effective and efficient as an excavating agent.

Experience and common sense would seem to point out that there is a definite way in which the series of operations already mentioned as going to make up the process of manufacture of machine peat should be carried out, in that, the excavating and macerating are best done from a movable platform kept adjacent to the working face, and that the spreading for drying is done, preferably on the surface of the bog immediately adjacent. It would also seem desirable that any peat deposit should be worked in such a way that the raw material is cleaned up as the work progresses, and the deposit systematically worked out.

The general plan adopted by Mr. Anrep, Sr., along with all others, except the Canada Fertilizer Co., and those who advocate the same plan, is to excavate along a trench, so chosen that it is widened out by continued excavation, and that the bog will be exhausted to the best advantage. The width of the trench excavated in one operation depends on the depth of the raw material. The peat pulp is spread away from this trench, in rows at right angles to it, and of such length that the excavating and macerating plant is continuously in the same relative position to the spreading operation. For example, supposing the trench to be 20 feet wide and the peat 10 feet deep, 200 cubic feet would be excavated for every foot the whole plant moved ahead. In going through the macerator, this volume would be reduced probably 15%, leaving 170 cubic feet of pulp to spread. Now, to keep pace with the movement of the plant this must be spread in a strip one foot wide, and if spread 4 inches deep would require three times 170, or 510 feet long, making the spreading area this width. If the excavated area were 30 feet wide, this width would be increased to 765 feet, which is probably getting nearly as wide as would be found economical.

So far as the excavating is concerned, then, a satisfactory excavator must excavate at various depths up to the depth of the peat in the bog, and it must excavate a trench up to 30 feet or over in width, and it should not leave vertical walls, as these have a tendency to cave in and interfere with the systematic working of the plant, besides losing a lot of material. It should also operate in such a manner as to permit of the roots being picked out without interfering with its work, and because in nine cases out of ten it must be supported on the soft yielding surface of the bog, it must be of comparatively light construction, with the weight spread well over the surface, and some distance back from the cutting face.

The Anrep excavator fulfills all these conditions, and although it is difficult to give a comprehensive description of this device, the following is submitted.

Like the Anrep structure at Alfred, the improved plant is built on a rectangular platform (2) supported on wheels, which in turn travel on portable track, (1) in short sections, resting on long ties, placed on the surface of the bog. On this platform, again similar to Alfred, is placed the motive power, (3) preferably an electric motor or motors, but if necessary, an engine and boiler can be used, and also the excavator, the macerator, and the other devices mentioned later on. The whole platform may be moved ahead automatically on its rails, as desired, and it moves in the direction of the working trench, excavating this trench up to its full width, in its rear, as it moves forward. On the rear end of this platform is superimposed in an oblique direction, a pair of rails (6 & 7) which project up to 15 or 20 feet on either side of the platform, the steel framework (4) supporting the projecting ends of these rails having an extra wheel running on an extra single rail, which helps further to distribute the weight on the surface of the bog. On these oblique rails there runs a light steel traverser (8) automatically moving from one side to the other the full width of the excavation, which carries the excavating agent (9). This traverser, driven by its own independent motor, is practically an independent device travelling slowly backwards and forwards on these oblique rails, excavating a layer of the raw material from the working face each journey. The entire supporting rails are moved ahead from time to time, as a new cut is made, by the movement of the underlying platform.

The excavator proper is of the ordinary bucket type, designed specially for peat, and is so mounted that it leaves all working faces on a natural slope. The depth of the cut is automatically adjusted, as desired, and while the excavator is in motion, by cables working on a power drum.

In operation the original platform remains stationary, while the traverser, carrying the excavator, makes its journey. Then the whole platform automatically moves forward a few inches for a new cut and the traverser makes its return journey, making a second cut the full width of the excavation, and so on.

From the buckets of the excavator, which are self cleaning, the raw material drops into a hopper connected to the excavator which delivers the peat into a stationary trough (11) running the full length of the superimposed rails, and parallel to them. This trough in turn delivers at a fixed point into the hopper of the macerating mill, (1) so that no matter in what position the traverser may be, the excavated material is quickly conveyed to the hopper of the mill. From the mouth of the macerating mill the now prepared pulp is conveyed to self dumping hopper cars (14) by a suitable conveyor, (13) and these in turn deliver the pulp to the spreading apparatus as at Alfred.

The unique features of this apparatus are, the shape of the buckets, which are self cleaning; the design of the excavator arm that permits of its adjustment to different depths; and the method of mounting the excavator on a traverser moving *obliquely* across the cut being excavated, in such a manner that all walls left standing are on a natural slope. The mechanical design is excellent, in that it is simple, strong and light, and permits of such wide distribution of the weight, that a very much heavier device could be supported in safety on the same area, on the softest of bogs.

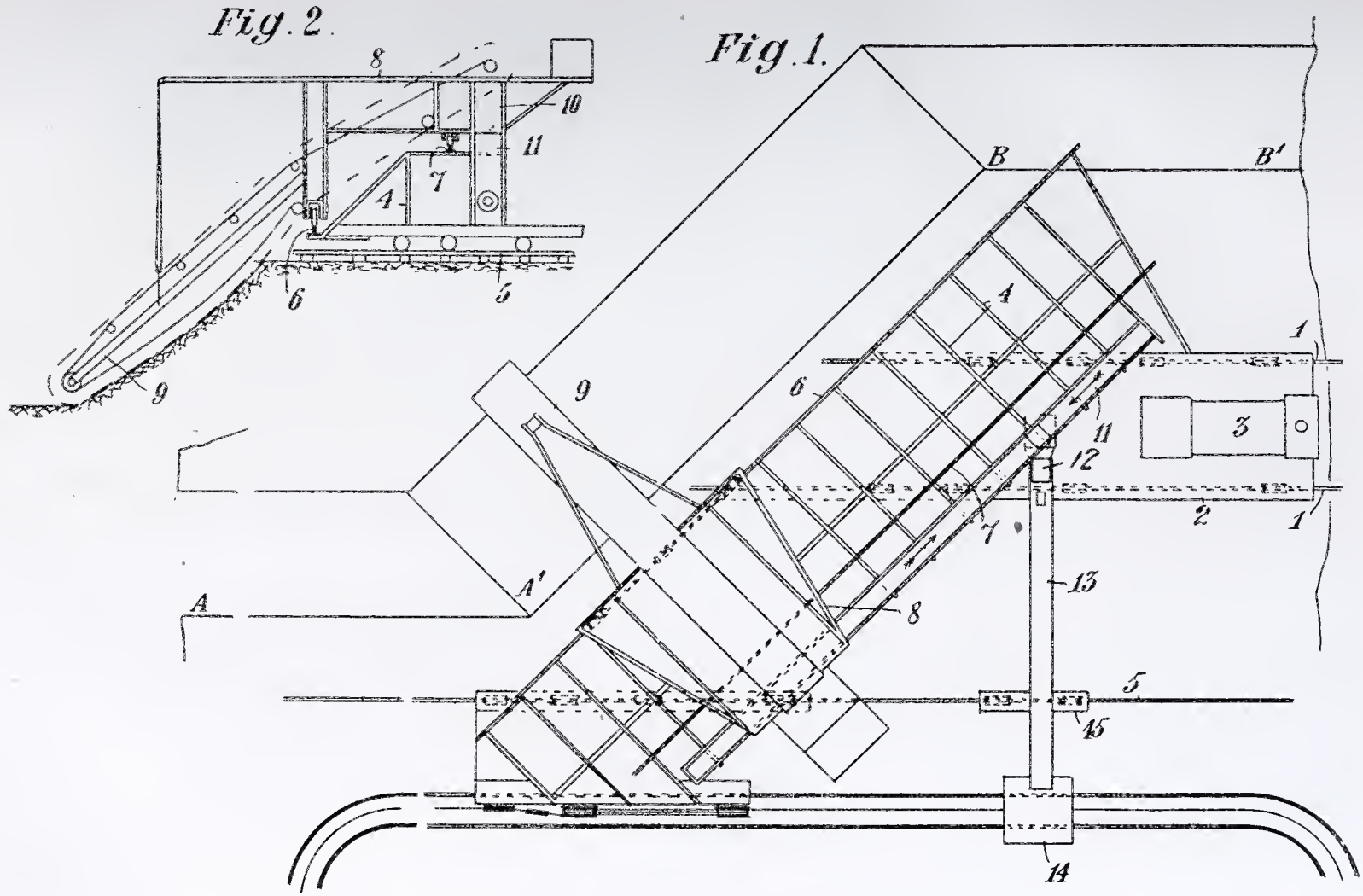

PLAN AND SECTION OF IMPROVED ANREP PEAT EXCAVATOR AND FUEL PLANT.

The macerator on this plant is also of an improved type. The function of this machine is two-fold, in that it is desired to cut up very fine any undecomposed roots or grass in the raw material, and also to thoroughly mix and puddle the mass. The difficulties to be encountered are, to get these undecomposed materials cut up fine enough, and to keep the machine from clogging up, as some of the grasses, etc., found in the raw material are very tough and stringy. If pure, well decomposed peat only were to be dealt with, a shaft, with a number of projections of almost any shape, revolving in the mass would accomplish the desired end, but in practice such a device would be absolutely clogged up with roots and grasses in a very few moments, running.

The Anrep mill is peculiar, in that the arrangement and design of the knives is such that nothing can lodge in the machine, but everything is of necessity worked through the mill. The knives are very strong (of cast steel), and work against corresponding stationary knives, the edges being sharpened so that they act as so many pairs of shears, and a safety device is provided to prevent breakages if any foreign matter, or a too large piece of root, accidentally gets in, by a coupling on the drive pulley held together with wooden pins which shear before any metal part of the mill can break. This machine is also well designed, has no superfluous weight, and every part is easily accessible for inspection or repair.

The excellence of any peat mill, however, depends upon how well the small roots are cut up, the output of the mill compared to its weight, and the amount of puddling accomplished per horse power turned into the machine. In all these respects the new mill seems to excel any other now on the market. The principal change in the improved device consists in lengthening out the pugging chamber, adding more pugging knives, and in improving the mouthpiece by use of which the rate of discharge may be regulated and any amount of puddling desired may be obtained, by holding the pulp back. This, of course, would require more power if the output is to be maintained.

The new mill has a capacity up to 8 to 10 tons per hour of fuel, sufficient to take care of the full output from the excavator, and to deliver well over 150 tons of fuel per day of 20 hours.

The main platform also has suitable driving drums for the different cable hauls, and also a root pulling device whereby a chain is always convenient in the working pit which can be attached by the workman there to any roots too large to handle by hand, and the root pulled out and thrown out of the way of the excavator. Suitable housing for the motors and tools etc., is also provided.

Further improvements in the process at large, consist in a more convenient arrangement of the cable used to convey the cars of peat pulp to the spreading apparatus.

In the new arrangement, the length of the cable remains constant as the tracks are shifted, and this operation is greatly facilitated, and, also, a new arrangement of the cable to the spreading device permits this device to work in both directions, no time being lost in returning it to a starting point as now has to be done at Alfred.

Furthermore, a new spreading device has been designed, calculated to take the full output of the excavator and macerator, and improved in that it is provided with heavy rolls to more perfectly level down the drying field, also a spiral screw device is provided to more perfectly and evenly distribute the peat mass as it is being spread, and a simple device is provided, attached to the spreader, which cuts the peat crosswise, thus doing away with the work of doing this by hand.

This completes the improvements Mr. Anrep has made in the appliances peculiar to his process of making machine peat.

Before concluding this paper, it is perhaps desirable to outline generally the conditions necessary to install one of these plants, its operation; output and cost.

It is estimated that the life of a plant with proper handling will be about 20 years, and the following deductions are then more or less evident. The average output is placed at 15,000 tons per season, allowing 100 clear working days, two shifts per day, and seven and one-half tons per hour output. This will vary up to 20,000 tons per season, depending upon the weather, but is unlikely to drop under the above minimum figure even in the worst weather in this latitude. At 20,000 tons per season, for 20 years, raw material for 400,000 tons must be provided. An average bog, averaging say 8 feet deep, will yield at 200 tons per foot acre, 1,600 tons per acre, and, therefore, at least 250 acres must be provided. Generally speaking, it is advised to have at least 300 acres available per unit plant. This makes a square about 3,600 feet to a side, and this is the shortest possible working line that could be chosen in an area this size. If the deposit is rectangular a longer and therefore more desirable line might be obtained.

The drying season being limited, it is proposed to equip all the improved Anrep plants for working two shifts, that is, 20 hours per day, and in this time a minimum of 150 tons of fuel will be produced. At 200 cubic feet of raw material per ton of finished fuel, this calls for a daily excavation of 30,000 cubic feet and if the excavation is 30 feet wide and 9 feet deep, this will mean a travel for the whole plant of about 115 feet per 20 hours, or, it will take 31 working days to cross the property supposing no longer line than 3,600 feet can be chosen.

A minimum period of 60 days should be allowed for the fuel to dry, and, therefore, with a 3,600 foot trench, work would have to be done on each side during the season, and the line would preferably be laid out to divide the deposit equally. If the peat were 9 feet deep the drying area would be about 800 feet wide, and would have to be prepared on either side of the working trench which, incidentally, would in all probability be the main drainage ditch on the property. The total drying field would be about 130 acres.

The installation of the peat mill and the spreading apparatus is most simple, and would take only a few days, as the whole plant is complete in itself, that is, outside of the power, and this will assume a different aspect at almost every installation. The ideal power plant would be a stationary producer gas plant such as the Department of Mines have in operation at the Fuel Testing Station, at Ottawa, generating electricity which would be transmitted to the different motors on the

plant in the field, but this will probably be too high in first cost to appeal to those making a start in peat fuel manufacture. The next best thing is a stationary steam plant, generating electricity, and this might eventually be replaced by the producer outfit. The cheapest installation of all, and one quite satisfactory, is similar to that at Alfred, where a portable boiler and engine is installed directly on the platform of the peat mill.

In operation, when the plant is all installed, and supposing a stationary power plant is used, the following men are employed per shift, to put the peat out on the ground to dry:—

One engineer.
One helper for same, (a boy to fire).
One man, operating the peat mill.
Two men, picking out roots and shifting track for the main plant.
Three men, handling the pulp cars.
Two men, moving the portable track.
One man, attending the spreading apparatus.
One boy, attending cables, etc., of the spreading device.

In all, 10 men and two boys, whose daily wage will be about	$20.00
Add to this for fuel and supplies per shift	3.00
Total, to put 75 tons fuel out to dry.....	$23.00
Or, per ton, for labour to put out to dry, about.....	.30
Add for turning and cubing(done by contract)	.17
	.47

Total labour cost ready for storehouse, say fifty cents.

Overhead charges on a capital investment of say $25,000.00, which will cover the total cost of installation, provide a working capital until fuel is on the ground ready for sale, and also purchase 300 acres of bog at present prices, and provide considerable store sheds, including all charges of management, superintendence, office expense, taxes, etc., amount to, in round figures, fifty cents per ton, calculated on a 15,000 ton per year output, making the total cost of the fuel on the field, about $1.00 per ton.

To this must be added from 15 cents to 25 cents to put in the storehouse and on the cars, making the total cost f.o.b. about $1.25 per ton. This estimate is probably about 20% too high.

This figure, however, gives the manufacturer a clear profit of $1.00 per ton, a figure that should satisfy the most exacting when it is noted that an investment of $25,000.00 will provide a 15,000 tons per season plant complete.

Finally, as to the cost of this improved Anrep machinery. It is conservatively estimated that $12,000.00 will cover the cost of the entire moveable plant, including a stationary steam generated electrical plant. A producer outfit would add materially to these figures.

EUROPEAN PEAT SOCIETIES.

By A. Anrep, Jr., Peat Expert, Mines Branch, Ottawa.

The Swedish Peat Society was organized in the year 1886, by Carl Von Freibizen, Director of the Chemical Station in Jönköping.

In the beginning this Society received yearly grants—

From the Government of	$ 4050.00
From the Conservation Commissioners, Office of	3113.00
From the Provincial Government of	2242.00
Total sum of	$ 9405.00

These grants added to the income received from the members of the Society, from the experimental station at Flahult, from the analyses, etc., making a yearly revenue of $13,500.00.

This money is used, for publishing the Society's Journal, for experimental work in agricultural line, for investigation of peat bogs, drainage of bogs, reforesting the bogs belonging to the different experimental stations, meetings of the Society, etc.

The revenue of the Society has increased so that at present it amounts to $18,630.00 yearly.

The Norwegian Peat Society was organised in Christiania in the year 1902. This same year it received a government grant of $540.00 which has yearly increased. In 1910 the Government grant amounted to $6,400.00, a large sum for the small kingdom of Norway.

J. G. Thawlow is the Secretary and Peat expert of the Society.

The Danish Peat Society was organized in 1866, and received a Government grant of $2700.00.

The Finnish Society in Helsingfors, Russia, was organized in the same way as the above mentioned Societies, and receives the highest Government grant of all Societies in Europe of $16,075.00.

Vereins zur forderung des Moorkultur in Deutschen Reiche, (the German Peat Society) was established in 1882 in Berlin. In 1887 their Society added an experimental stations at Bremen.

At the time the Society was established a Government grant of $750.00 was given. In 1900 the membership consisted of from 600 to 700 members and the

grant was raised to $1000.00. At the present time the membership consists of over 1,000 members and the Government grant has been raised to $5,000.00 yearly.

The German Austrian Peat Society in Munich under the Directorship of Hans Schreiber and the Bavarian Royal Peat experimental station, under directorship of Dr. Baumann, also receive Government grants.

All these Societies are organized on the same principle, more or less. The purpose of a Society should be to advance the important peat question, to develop and advise suitable methods for manufacturing of peat fuel, peat litter, peat coke and other processes if they are found practicable.

Particularly to spread knowledge through lectures, papers, articles, meetings for consultations and suitable means for distributing information regarding the development and cultivation of peat bogs, swamps and mires.

To be able to know how to use different kinds of peat as an improver for agricultural purposes, as well as how to use different kinds of fertilizer for various kinds of peat, to adopt practical methods for cultivation of waste peat bogs, which are not suitable for manufacturing of fuel or for other purposes outside agriculture.

The American Peat Society has been organised on the same principles as the European Societies, but unfortunately this Society has no help from the U.S. Government and has had to struggle hard for its development.

I hope that the Canadian Peat Society which at present is to be organized will flourish and develop above all the sister Societies in Europe and United States. As Dr. Haanel has already stated in his paper to the American Peat Society "We can at present form no estimate of the enormous extent of our peat bogs. The 37,000 square miles already known, form probably but a small fraction of the amount of this valuable fuel asset in existence in Canada."

These enormous extents of peat bogs are not all suitable for fuel, some of them are too shallow, some too small and some not sufficiently decomposed. Peat areas which are not suitable for manufacturing of fuel are probably suitable for peat litter or may be developed into valuable agricultural fields.

A new country like Canada, which is progressing very rapidly and where the population is increasing every day, should take into consideration the conservation question of the enormous waste areas on its continent.

PROCEEDINGS OF THE CANADIAN PEAT SOCIETY.

Preliminary Organization Meeting.

At the close of the Convention of the American Peat Society, held in the Provincial Normal School Building at Ottawa on July 25–27, 1910, a meeting of those present who were interested in the formation of a Canadian Peat Society was held on Wednesday, July 27th, 1910, the chair being taken by Dr. J. McWilliam, London, Ont.

A draft constitution, similar to that of the American Society, was approved and adopted, the name of the organization to be the Canadian Peat Society with headquarters at Ottawa. Officers *pro tem* were chosen to act until the holding of the first general meeting to be held at a convenient date after due notice. The officers thus elected were: President, Dr. J. McWilliam, London, Ont.; Vice-President, L. B. Lincoln, Farnham, Que.; Secretary, Arthur J. Forward, Ottawa, Ont., the gentlemen named constituting the provisional or temporary Board of Directors of the Society.

The annual membership fee was fixed at $1.00, payment of which should entitle members to receive all publications of the Society, and the officers of the Society were appointed a committee, with power to add to their numbers to memorialize the Dominion Government, requesting financial aid towards carrying out the objects of the Society.

The meeting was then adjourned.

FIRST GENERAL MEETING.

Pursuant to notice the first general meeting of the Society was held in the Board of Trade rooms, Ottawa, at 2 p.m., on Tuesday, March 28th, 1911.

The chair having been taken by Dr. McWilliam, the President, notice calling the meeting was read, and the proceedings at the preliminary meeting held on July 27th, 1910, stated by the Chairman. The first item of business being to confirm adoption of the Constitution, a resolution was presented by the Secretary, seconded by Mr. E. V. Moore, Peterboro, Ont., that before proceeding to final adoption of the Constitution, Clause (7) be amended to read as follows: "This constitution may be amended at any annual meeting by a two-thirds vote of the members present."

The amendment was opposed by Mr. L. B. Lincoln on the ground that it would prevent proxy voting, and he stated that he was present holding proxies for about fifty members for whom he demanded to vote at this meeting.

Mr. J. M. Macoun of the Dominion Geological Survey, strongly supported the amendment, and stated that the Canadian Forestry Association, of which he was one of the founders, had found a similar rule to work very successfully. The Chairman ruled that no notice of proxies having been given to the Secretary, or opportunity to verify same, and a resolution being before the meeting at the time they were presented, they could not be considered. Upon a vote of those present the amendment was carried, Mr. Lincoln alone dissenting.

A further resolution was put and carried providing for an Executive Committee of three members to act in conjunction with the officers of the Society, and the Constitution as amended was formally confirmed and adopted.

It was moved by the Secretary, seconded by Edmond Proulx, M.P., and carried, "That the Society tender to Dr. Eugene Haanel the position of Honorary President."

Upon the recommendation of the Board of Directors the following Honorary members were elected:

Hon. Wm. Templeman, Minister of Mines,

Hon. Clifford Sifton, Chairman of the Commission of Conservation, and

Prof. Charles A. Davis, of the Bureau of Mines, Washington, D.C., United States Government Peat Expert.

Officers for the ensuing year were then elected as follows:

President—Dr. J. McWilliam, London, Ont.

Vice-President—J. M. Shuttleworth, Brantford, Ont.

Secretary-Treasurer—Arthur J. Forward, B.A., Ottawa, Ont.

Executive Committee—A. W. Fleck, F. Pedley, John R. Reid, Ottawa, Ont.

A resolution was passed to the following effect:

"That the Board of Directors be instructed to investigate the question of a government bounty on peat fuel, and at their discretion to take such action with regard thereto as may appear to them to be in the best interests of the peat industry."

The following papers were read:

Peat development in Canada.—L. B. Lincoln.

Peat Societies of Europe.—A. Anrep, Jr., Peat Expert, Mines Branch.

The improved Anrep peat machinery.—E. V. Moore, B.Sc., C.E.

Power production from peat gas.—B. F. Haanel, B.Sc., Chief of Fuel and Fuel-testing Division, Department of Mines.

The meeting was then adjourned.

At the close of the meeting the majority of those present visited the Government fuel testing plant, where the production of peat gas in a Körting producer, and its utilization for power to run an ore-crushing plant, was demonstrated and fully explained by Mr. B. F. Haanel and his assistants. This brought the proceedings to a close.

Journal of the Canadian Peat Society.

Published Quarterly by

THE CANADIAN PEAT SOCIETY

22 Castle Building, Ottawa, Can.

OFFICERS: 1911–12

Honorary President: Dr. Eugene Haanel, Director of Mines, Ottawa, Can.

President: J. McWilliam, M.D., London, Ont.

Vice-President: J. M. Shuttleworth, Brantford, Ont.

Executive Committee: A. W. Fleck, John R. Reid, and Frank Pedley.

Secretary-Treasurer: Arthur J. Forward, B.A., Barrister, 22 Castle Building, Ottawa, Can.

Subscription Price (4 numbers) **$1.00**

Advertising rates will be furnished on application.

Remittances may be made by cheque (payable at par in Ottawa), draft, money order, or postal note to the Secretary-Treasurer of The Canadian Peat Society, 22 Castle Building, Ottawa, Can.

EDITORIAL.

For many years past unsuccessful efforts have been made in Canada to utilize the fuel resources lying dormant in our great deposits of peat. Especially was this the case in Ontario and Quebec, which, being without coal measures, are naturally most deeply interested in the matter of economical fuel supplies. The first practical step in the right direction was when the Department of Mines, about four years ago, sent an engineer to Europe to investigate the most successful methods there in use. Following this came the establishment of a demonstration plant at Alfred, Ont., which has proved a pronounced success. When the American Peat Society, of which Dr. E. Haanel, Director of Mines, was then President, met at Ottawa in 1910, a number of Canadian peat men being gathered together at that Convention, the

opportunity was thought a favorable one for the foundation of a Canadian Peat Society. The objects of the Society then formed were stated by the Constitution to be as follows:—

"The purpose of the Society shall be to gather and disseminate information concerning peat and peat deposits and products, by publications, correspondence, conventions, lectures, or otherwise, for the purpose of educating the public as to the value of these products; to encourage the drainage and development of bog and peat lands for agricultural purposes; to gather all kinds of information for publication as to the location, extent, quality and value of such deposits, as to all plants, factories, persons and companies experimenting or manufacturing such products, and as to the various kinds of machines, processes and devices destined or used for such purposes; also to counsel and advise persons seeking knowledge along such lines of work looking towards uses of such products, and generally to adopt such measures as may aid in the establishment on a sound basis of a peat industry in Canada."

In pursuance of these objects it has been deemed advisable to issue a quarterly Journal devoted to the development of the Canadian peat industry.

Members of the Society, and all others interested in the utilization of our peat resources, into whose hands our publication may come, are earnestly requested not only to overlook the defects of the present initial number, but to render their active assistance, by suggestions, correspondence, or otherwise, in making our Journal a source of accurate information, and of encouragement and aid to peat men in general. It will be the endeavor of the management to give fair support without favor to every bona fide effort in the interest of the peat industry. And on the other hand to criticize in a friendly and helpful spirit, whatever may appear detrimental to the permanent success of the industry, and to the establishment of public confidence in this latest movement for the utilization of latent national resources.

FREIGHT RATES.

The success of the peat industry in Canada will largely depend on the cost of transportation of the product to market. Recognizing this fact, the Executive of the Canadian Peat Society have taken steps to bring the matter before the ailway companies. The existing tariff rates are as follows:

PEAT FUEL: Carloads, minimum 30,000 lbs.

Mileage basis to be used where specific tariffs are not in force.

Not over 10 miles	3	cents	per	100 lbs.
Over 10 and not over 20 miles	3½	"	"	100 "
" 20 " " " 30 "	4	"	"	100 "
" 30 " " " 50 "	4½	"	"	100 "

Over	50	and	not	over	75	miles	.....	5	cents	per	100 lbs.
"	75	"	"	"	100	"	.....	6	"	"	100 "
"	100	"	"	"	125	"	.....	7	"	"	100 "
"	125	"	"	"	150	"	.....	8	"	"	100 "
"	150	"	"	"	175	"	.....	9	"	"	100 "
"	175	"	"	"	200	"	.....	10	"	"	100 "
"	200	"	"	"	225	"	.....	10½	"	"	100 "
"	225	"	"	"	250	"	.....	11	"	"	100 "
"	250	"	"	"	275	"	.....	11½	"	"	100 "
"	275	"	"	"	300	"	.....	12	"	"	100 "
"	300	"	"	"	325	"	.....	12½	"	"	100 "
"	325	"	"	"	350	"	.....	13	"	"	100 "
"	350	"	"	"	400	"	.....	14	"	"	100 "

About thirty car-loads were shipped from Alfred to Ottawa last season, a distance of forty-two miles on which the freight rate was 4½ cents per 100 lbs., or 90 cents per net ton. Valuing the peat at the bog at $2.25 a ton, and placing cost of handling from the cars and distribution at 65 cents per ton, this made the cost delivered to the consumer in Ottawa, $3.80 per ton. As the fuel sold at $3.50 a ton, there was clearly a loss involved.

Representatives of the Grand Trunk and Canadian Pacific railways were interviewed with regard to the granting of a lower rate from Alfred to Ottawa, from St. Brigide to Montreal and between other points, and having declined to make any changes in the existing schedule of rates, the Society made an application to the Eastern Canadian Freight Association on July 10th last.

On July 31st the Secretary of the Association notified the Society that "the carriers cannot see their way to publish a basis of rates on this commodity lower than the scale at present in effect."

THE NEWFOUNDLAND PEAT BOUNTY ACT.

According to the terms of an Act passed in 1905 (5 Edw. VII., Cap. 18) the government of Newfoundland grant a bounty of twenty-five cents per ton upon every ton of "machine manufactured" peat fuel produced in the Colony for consumption or export, payment of same to be made to the manufacturers, upon proper evidence, for a period of five years from the date of the manufacturer's first sale. In March, 1911, a further Act (1 Geo. V. Cap. 21) was passed extending the period for payment of such bounty to ten years. Under these Acts all machinery imported into Newfoundland for the manufacture of peat fuel is admitted free of duty. The latter Act excludes from its operation peat fuel manufactured by any Company under special agreement with the Governor-in-Council. Such an agreement was entered into with the government of Newfoundland in March,

1911, by the International Carbonizing Company, controlling a wet carbonizing process. The agreement gives the Company three years within which to examine and locate suitable bogs. Upon selection of same the government agree to grant sites for buildings, etc., not to exceed ten acres in each case. Before calling upon the government to grant any such site, the Company undertake to erect a complete wet carbonizing factory to cost not less than $125,000, and having an annual output of not less than 20,000 tons of wet carbonized peat per annum.

The bogs selected by the Company are to be leased to them by the government under certain conditions for a term of ninety-nine years, the Company agreeing to pay therefor a royalty of ten cents per ton of wet carbonized fuel produced; all property of the Company to be exempt from taxes, and all machinery required to be admitted free of duty for a period of twenty years. The government agree to grant water-powers free of charge, and also use of unoccupied crown lands for temporary purposes. The agreement to be void unless at least one factory is erected and put into operation within three years from the date of the Act.

During the past summer the government have had two Irish experts operating on the south coast, instructing the people in the cutting and preparing of hand made dried peat.

It is reported also that Lieut. Petersen, a Swedish military officer and peat expert spent six weeks examining bogs for the International Carbonizing Company, and decided to advise erection of plants at Gambo and St. George's under the agreement with the government.

PEAT FUEL IN SWEDEN.

A very interesting article on the condition of the peat industry in Sweden in 1910 by Alf. Larson, appeared in the Osterreichische Moorzeitschrift, of May 15, 1911, translated from Teknisk Tidskrift.—Mr. Larson's article was, in part, as follows:—

M. Rahbek, who died in 1910, in his seventieth year, began work on the large bogs at Sparkjaer by a method old in principle but new in its execution. Much time and money were devoted to this work, and the whole district in which the bogs were located became prosperous through the great peat works, M. Rahbek established. It is no exaggeration to say that at Sparkjaer the cheapest peat fuel in the world was made.

In 1910, the weather was no more favorable in Sweden for the production of air-dried peat fuel than it had been for the preceding four years. The power station at Skane, which was a steam plant, depending upon air dried peat to operate, was obliged to have recourse to coal. Under these circumstances it cannot be disputed that the peat power plant on the Körtings' system is surer, since it can utilize peat with over 40 per cent. water content. In Sweden, there are, at the present time, power stations on bogs generating about

2,000 H.P., the largest of which in Gotland, produces 1,500 H.P. According to certified tests there last year, it was shown that the use of peat with an average of 41·7 per cent. water contents and 2,400 eff. calories per Kg. of peat consumption per horse power hour, including all waste, amounted to 1·42 Kg. (equivalent to 0·842 Kg. of dry peat.)

Lieutenant Elekund's process of manufacture of peat powder has attracted a good deal of attention in Sweden during the last year. Favourable opinions on the experimental plant at Back in Smaland have been given by the chief government peat engineers, and others, and wherein the new method differs from the old one, which was in use for fifteen years at Elmhult and produced good peat powder but failed because unprofitable, does not appear from the reports. The principle is the same: the excavated peat is air-dried to about 50% water content, and the greater part of the remaining water removed by artificial means. The novelty consists—it must be assumed—in the drying arrangements, but not being set forth in the reports, is not a matter of public knowledge, and can only be fairly judged by those more intimately acquainted with the process.

In the Teknisk Tidskrift, 1896, there was reported an experiment of heating a steam boiler with peat powder at the Elmhult works. The result was that 1 Kg. of peat powder, containing 17 per cent. water, gave the same evaporation as 0·93 Kg. of Newcastle coal on a grate, which was not surprising since, with powder, especially peat powder, known to give a very great heat, a good air supply can be furnished. The fact remains, however, that the commercial value of a fuel must be reckoned on the basis of its calorific value, and that the burning of peat in powder form does not make it any better in comparison with coal than it was before. Other conclusions are hasty, since a peat powder heating plant (at least as regards existing fire-boxes) is no simpler nor easier to attend than a gas heating plant, and to extract the 50 per cent. of water from the peat, costs no more in a gas-producer than in a drying oven, in fact rather less.

How far the Ekelund peat powder is preferable to ordinary finely divided peat for iron reduction, seems in doubt. The main point in the Ekelund process is its independence of the weather, and the circumstance that the peat is taken from the bog by a mechanical excavator.

Dr. Gustaf de Laval has taken up anew the wet carbonization method with application of entirely new principles. Without going into detail, it may be stated that the wet carbonizing apparatus, the removal of most of the water from the wet carbonized mass, the drying of the latter, etc., are all different from the plans tried on a large scale at Stafsjo in 1905 and 1906. Judging from former experiments, there is justification for the belief that the present researches of Laval will have a successful issue. In the "Bihang till Jarnkontorets annaler" number 11 for 1910, H. Bergström and Otto Tingberg have demonstrated that with the solution containing hydrocarbons, which results when peat is heated

with water under pressure (just as in the process of wet carbonization), a solid product is obtained which contains less carbon than is contained in the original peat, and that therefore the residue of the peat treated is richer in carbon. A real carbonization has therefore taken place, with this difference, however, that instead of a gas containing carbon in its constitution, a fluid is produced which contains carbon. This explains the process of wet carbonization. It may be stated that the purpose of the wet carbonization is not to increase the heating value of the peat, but to render it compressible. On the contrary, it would be desirable that no carbonization should go on with accompanying loss of organic substance in the compressed mass, but for the advantage of easy compressibility one must submit to it. Experience shows that the best results were obtained when the peat mass was heated for a short time, say up to ten minutes, to 180^0 C. The author has carried on experiments which showed that by longer heating at that temperature the carbonization is higher, but the output correspondingly smaller; also that the utility of the peat is less. Still more is this the case when the temperature is raised to 250^0 C.

Since opinions on the peat-supply of Sweden differ widely, it may be of interest to state how much peat fuel the government peat engineers have located in 1901–1909.

In this period they have examined 1,176 peat bogs with a combined content of 33,925 *ha* (83,794 acres). Of these 9,896 *ha* (24,443 acres) are best adapted to peat fuel production, 12,873 *ha* (31,976 acres) to moss litter production, 7,021 *ha* (17,341 acres) for both litter and fuel, preferably the former, and 4,135 *ha* (10,213 acres) are unsuitable for industrial purposes. The fuel bogs are estimated to produce 53,777,835 tons of air dried peat with an average of 5·05 per cent. ash, and 5,140 calories per 1 Kg. The litter moors comprize 336,729,500 M^3 (drained bog) with an average of 1.595 per cent. absorptive capacity. These 54,000,000 tons of peat fuel are about the equivalent of 30,000,000 tons of coal. Since the aggregate area of the bogs of Sweden may be estimated at about 5·2 million *Hektar*, (13,844,000 acres) assuming that the bogs yet to be surveyed, are in quality similar to those already examined, then the unsurveyed bogs contain about 150 times as much peat as those examined and would yield a quantity of peat fuel equivalent to 30,000,000 x 150 = 4,500,000,000 tons of coal which at the present rate of annual consumption would last about 1,100 years.

OPERATION OF GOVERNMENT PEAT PLANT AT ALFRED, 1911.

The demonstration plant erected by the Department of Mines at Alfred, Ont., has had a very successful season's working. According to estimates of the amount excavated, about 2,400 tons of peat fuel, with 25% moisture, were manufactured during eighty-five days of actual working. As the capacity of the plant, which is a small Anrep plant, employing manual labour to a large extent, is estimated at 30 tons per diem, this means that the production has been almost to the full capacity of the machinery. Several hundred tons of peat from this plant were sold in Ottawa and surrounding places last fall and gave excellent satisfaction to consumers. In response to a circular letter issued by the Society about 150 replies were received in which fully 95 per cent. of the writers expressed their satisfaction. The fuel has been again placed on sale this fall in Ottawa, being delivered to consumers at $3.50 per ton. Owing to the serious car shortage great difficulty has been found in delivering the peat to supply orders which had been given in advance to the extent of nearly 1,000 tons.

THE FARNHAM PLANT.

Detailed information with regard to the operations of Peat Industries, Limited, on their bog at Ste. Brigide near Farnham, Que., are not to hand, but from the statement of their manager Mr. L. B. Lincoln, at the Kalamazoo convention of the American Peat Society, the Company manufactured during the past season, about 600 tons of peat fuel, during 27 days of actual working.

PROPOSED COMMERCIAL PEAT PLANT AT ALFRED, ONT.

It is reported that arrangements have been made with the Department of Mines, whereby operations on the government bog at Alfred will be carried on next year by a company who propose to erect an enlarged and improved Anrep plant, with mechanical excavator and other devices, capable of manufacturing about 15,000 tons of air-dried machine peat fuel during the season. It is understood that orders for machinery in connection therewith have been placed, and that all will be in readiness for an early start in the spring. Electric power will be used to operate the machinery and light the bog, and two or possibly three shifts of men will be employed giving practically continuous operation during the season;

which is estimated at about 110 days. A full description of plant and process will be found in the article by Mr. E. V. Moore, engineer for the Company, in preceding pages of this number. Owing to the perfecting of arrangements for harvesting and transporting the manufactured fuel , it is unlikely that the plant will run to capacity during the first season, but a very substantial output is expected. Ready market for the fuel will be found in Montreal, Ottawa, and near-by towns and villages.

MEETING OF AMERICAN PEAT SOCIETY.

The fifth annual convention of the American Peat Society held at Kalamazoo, Michigan, on September 21st–23rd, 1911, was one of the most successful since the inauguration of the Society. Among the important papers read at the meeting were:

The Peat Gas Producer of the Department of Mines, at Ottawa, Canada.—B. F. Haanel, Department of Mines, Ottawa, Ont.

Recent Developments of Peat as a Power Factor.—Dr. T. Arthur Mighill, Boston, Mass.

The Use of Low Grade Fuels.—Prof. F. H. Fernald, Cleveland, Ohio.

Powdered Peat for Power.—Dr. J. McWilliam, London, Ont.

Recent Developments in Peat Machinery.—E. V. Moore, B.Sc., C.E., Peterboro, Ont.

Recent Progress in Peat Fuel Development.—Prof. Chas. A. Davis, Peat Expert, U. S. Bureau of Mines, Washington, D.C.

Peat Outlook in the Northwest,—Max Toltz, St. Paul, Minn.

An Up-to-Date Peat Plant.—L. B. Lincoln, Montreal, Que.

The Mond Peat Gas Producer with Recovery of Sulphate of Ammonia.—Power Gas Corporation, Stockton, England.

Peat By-Products.—Max Klar, Marquette, Mich.

Peat Briquetting.—Geo. M. Mashek, New York.

And a number of papers on the agricultural development of peat bogs.

Mr. Lincoln's paper was illustrated by moving pictures, showing a peat plant in operation near Farnham, Que.

Visits were made to see Mr. Carl Kleinstueck's peat fuel plant in operation, and to the Todd Farm, where a large tract of peat lands worked agriculturally was

inspected. The members of the Society and their friends were very acceptably entertained by Mr. Carl Kleinstueck at Saxonia Farm. Canadians present were:

Dr. J. McWilliam, London, Ont., President, and Mr. Arthur J. Forward, Ottawa, Ont., Secretary of the Canadian Peat Society, Mr. B. F. Haanel of the Department of Mines, and Mr. E. V. Moore of Peterboro.

The officers of the Society elected for the ensuing year are as follows:

President, Dr. Joseph A. Holmes, Director of United States Bureau of Mines, Washington, D.C.; Vice-Presidents—for Eastern States, John N. Hoff, New York; New England States, Dr. T. Arthur Mighill, Boston, Mass.; Southern States, Robert Ransom, St. Augustine, Fla.; Eastern Great Lakes States, Carl Kleinstueck, Kalamazoo; Western Great Lakes States, L. B. Lincoln, Chicago, Ill.; Pacific States, C. V. Jimeson, Los Angeles, Cal.; Canadian Section, Dr. J. McWilliam, London, Ont.; New York Section, Dr. Chas. F. McKenna, New York; Minnesota Section, Max Toltz, St. Paul, Minn.; Executive Committee, Dr. Chas. F. McKenna, Chairman; Julius Bordollo, John N. Hoff, G. H. Condist, John W. Hornsey, Herbert Phillips; Secretary-Treasurer, Julius Bordollo, Kingsbridge, New York City.

The next Convention will be held in connection with the International Congress of Applied Chemistry at New York, during the first week of September, 1912.

PEAT FOR POWER PRODUCTION.

Special attention is directed to the article by Mr. B. F. Haanel in the preceeding pages on the results obtained at the government fuel-testing station in production of power from peat. The full report on the operations of this plant, it is understood, has been delayed owing to alterations made during the past summer, from which even better results than those given are expected. The matter of power production is one of the greatest economic importance at the present time. A striking evidence of the interest felt is that representatives of the United Steel Corporation attended the meeting of the American Peat Society held in Ottawa last year, for the express purpose of investigating this matter. Many inquiries have been received by the Department of Mines, and requests for advice as to erection of power plants using peat.

In view of the rapid advance being made along this line in Germany and elsewhere in Europe, where a number of large plants are said to be in successful operation, it would undoubtedly be in the public interest if the Department of Mines were to send an engineer or engineers to investigate these plants and report fully before advising the adoption of any particular plant.

The investigations made in Europe by Mr. Erik Nystrom, which were for the most part confined to the manufacture of peat fuel, have led to such valuable results in bringing the peat fuel industry to a commercial basis in Canada, that the pursuit of a similar course in regard to the equally important question of power production would appear to be not only fully warranted, but almost essential to the best and safest development of the industry.

Vol. 1 FEBRUARY, 1912 No. 2

JOURNAL

OF THE

CANADIAN PEAT SOCIETY

Published Quarterly by the Society
Subscription Price $1 per annum
Single Number, Twenty-five cents

CANADIAN PEAT SOCIETY
Room 22, Castle Building,
OTTAWA, CANADA

(Copyright, Canada, 1912 by the Canadian Peat Society)

TABLE OF CONTENTS

PAGE

1. Aleph Anrep—Biographical Sketch by Alf. Larson. (Translated from "Teknisk Tidskrift") – – – – – – – – – – 3

2. European Peat Societies—Dr. Hjalmar von Feilitzen, Director of the Swedish Peat Society – – – – – – – – – – 7

3. Power from Peat—From "The Engineer", London, England – – – 10

4. Bulletin 16, United States Bureau of Mines—"The Uses of Peat for Fuel and other Purposes", Chas. A. Davis – – – – – – – 14

5. The Peat Industry in Holland. (Translation of a report of the Royal Minister of Agriculture, Industry and Commerce for the Netherlands) 17

6. Peat Industries, Limited – – – – – – – – – – 21

7. Editorial – – – – – – – – – – – – – 24

   Resolution of Commission of Conservation – – – – – – 27

   Drying Peat by Artificial Heat – – – – – – – – 29

   Investigation of European Peat Gas Power Plants – – – – – 30

   Peat as a Fertilizer – – – – – – – – – – 31

   Report of Canadian Trade Commissioner at Bristol, England – – 32

   Synopsis of reports on Ontario Peat Bogs – – – – – – 33

   Canadian Patents relating to Peat, 1910–11 – – – – – – 34

   New Members – – – – – – – – – – – 35

Aleph Anrep

Journal of the

Canadian Peat Society

Vol. 1 FEBRUARY, 1912 No. 2

ALEPH ANREP, A STANDARD-BEARER OF THE SWEDISH PEAT INDUSTRY.

By Alf. Larson.

(Translated from "Teknisk Tidskrift" January 27, 1912.)

On the 29th day of December, 1911, after many years of suffering, Engineer Aleph Anrep departed peacefully from this life in Helsingborg, Sweden.

He was born in Stockholm, on March 12th, 1845; graduated from Upsala University in 1863; became a Lieutenant in the Svea Lifeguards in 1865, and in the Bohuslan Regiment in 1872. He retired from the regiment the following year, and in 1877 left the army.

In 1868, he became interested in peat, and in 1875–1880 he was employed by "Jernkontoret" (Iron and Steel Institute). During this period he was several times in Germany, where he studied the peat industry.

In 1880 he visited Russia, returned to Sweden, and in 1881 removed with his family to Russia, where he remained until 1900, when he again decided to return to Sweden.

Anrep developed great activity during his twenty years stay in Moscow, and during this time was peat expert for the Iron and Steel Institute, and constructed his first peat machine, which was at that time considered to be the best. The writer saw one of these machines in operation on the Elmhult peat bog, after it had been used satisfactorily for over twenty years. It was during his stay in Moscow that the Anrep machines became superior to other constructions, especially to the German, which up to that time had taken first place.

Hundreds of Anrep's machines were manufactured yearly at the Kolomna Foundry Works near Moscow and at the Briansk Foundry Works near Orel. In 1901, during the writer's visit to Moscow, Arthur Koppel's branch office sold yearly more than a hundred Anrep peat machines.

His first peat machine in Russia was installed for Lebaschoff, Alexander III's Aide-de-camp, greatly to the advantage of his future business.

At the International Peat Machine Competition, 1883, at Bissereva, the Anrep machine received the highest award over eleven competitors representing the leading firms in Europe. In 1897, at the "Nischni-Nowgorad" exhibition, he received the large gold medal. According to reliable information obtained by the writer during his visit in Russia in 1901, over 1,000 Anrep peat machines were then in operation, in addition to 100 duplicated by his competitors. In the vicinity of Moscow alone there were at that time in operation about 500 Anrep peat machines. With a yearly production of approximately 4,000 tons of peat fuel per machine, there was at that time in Russia an aggregate production of about 4,000,000 tons of air-dried peat fuel by the Anrep system.

Up to 1906, Anrep had a considerable income from his business, and on account of his success in the peat industry, as well as for his social talents, he was esteemed by all classes of society, and even moved in the homes of princes. His peat machines spread over the whole Russian empire, from Ural to the Baltic Sea, and from the Gulf of Finland to the Black Sea.

The Anrep peat was used by the Russian sugar and cotton industries, by some of the foundry works, by several private railways, and by many private individuals for domestic use.

But, during his illness, some of the foundry works began to infringe upon his patent rights and manufactured his machines independently. This caused him much worry and loss of money. We know that an inventor has difficulties to overcome in vindicating his rights against infringers in Sweden, and it is even more difficult and expensive in Russia.

Mr. Anrep lost his fortune and partly his income, and in 1896 was attacked by inflammation of the spine as a consequence of which he was paralyzed and confined to his bed for five years. In 1900, he was able to sit up in a wheel chair and from that time on kept himself up until death released him.

As a recognition of his work for the Russian peat industry, Anrep received in 1897 a life pension from Alexander III. Three years ago, during Nicholas Second's visit to Helsingborg, where Anrep resided during the last years of his life, he received on account of his poor health an additional pension, which was a fine and unusual tribute from a monarch to a foreigner.

In 1900, Anrep returned to Sweden to remain. Owing to the length of his absence his machines had suffered neglect, in competition with others of considerably inferior construction; but they began once more to take front rank through his business connection with Munktel's Foundry Works in Eskilstuna, during the continuance of which they were further improved, and a new type of single shaft peat machine was constructed and put on the market.

At the Gefle Exhibition, 1901, Anrep received King Oscar II's Cup of Honour "for successful labours for the advancement of the peat industry."

During the tests of different peat machines in 1904, on the Stafsjo peat bog near Ljungby, which were held at the Government expense and under their control, the Anrep peat machine again received the highest award.

The leading firm in peat machines in Germany, viz.: "Dolberg", in Rostock, made an arrangement with Anrep to manufacture machines according to his construction. Later on he worked in conjunction with Abjorn Andersson's Foundry Works in Svedala, and further improvements were made in details of construction. He also worked out means for transporting and spreading the pulped peat on the field.

Anrep devoted his time in later years to an excavator specially adapted for use on our stumpy bogs. This was the only thing missing to complete the splendid Swedish method of manufacturing air-dried peat fuel. For testing his new invention Anrep received from the Government a bounty of 16,000 kronor, which he later, for certain honourable reasons, had to give up. This construction has now gone to Canada, where Anrep has a son who has devoted himself to the peat industry, and where it will be tried out and perfected on the Canadian peat bogs. It is not impossible that this most important apparatus, after it has been perfected in Canada (as was the case with the Anrep peat machines in Russia), will come back from the other side of the Atlantic to be introduced into Sweden.

During the five years Anrep was confined to his bed in Moscow, he devoted his time also to other inventions, one of which, a life-boat, was tried in Copenhagen, and proved to have certain advantages. For this construction he received a gold medal at Riga in 1902, "the 700 years jubilee."

Anrep also shewed his interest in the peat industry by establishing with the assistance of the Government and other persons, a peat school, at Elmhult, which was afterwards moved to Markaryd.

The Anrep peat machine is without doubt the best in the world. To enter into a detailed description would not be in place here, especially as all who are interested in peat know the main principles of its construction, but I wish to refer to a few points of interest.

The old peat machine had two parallel shafts which rotated against each other. These shafts were furnished with axe-shaped cutting instruments so placed that they together formed parts of a worm. However, they were not solid cast worms, as in competing machines. At the bottom, and on the side near the cover in the body of the peat machine , are placed strong counter-knives which extend as far as the rotating shafts. The ends of these counter-knives form half shaft bearings. The rotating knives meet the counter knives on both sides, so that the former cut like scissors against the latter. Owing to the rotating shafts being enclosed in half shaft bearings, which are formed by the ends of the counter knives, there are no places for roots and fibres to wind up, but they are thoroughly cut up, and are driven by wedge-shaped knives with the peat pulp to the mouthpiece. Besides, there is no gear between the shaft and the pulley, but they are both in one, so that, if a large root or a stone should chance to come into the machine with the raw peat, which usually causes an immediate violent resistance, the only result will be that the belt slides off the pulley, and the peat machine does not break. During Anrep's

connection with Munktell's the machine was further improved and made with a single shaft, lowering its cost, and rendering the construction more solid.

The writer saw a fish-plate which accidentally came with the peat into a machine, receive such a cut that it was not far from being divided in two. The belt slipped off the pulley, the machine stopped, and no part of it was injured,—not so much as the knife that made the cut. It can be said without exaggeration that the Anrep machine is a masterpiece of construction and receives too little attention.

Owing to his untiring energy and natural talent, Anrep was a skilful inventor and a man of unusual ability. He was cool and clear-headed, and was never carried away by the enthusiasm of an inventor to make exaggerated statements, or to be careless in his constructions. As proof of his energy may be cited that, although he was paralyzed for seventeen years—confined to his bed for five years, and to his chair for the remaining twelve years of his life—during all this time he worked constantly as a constructor and inventor, and, in spite of his great physical sufferings, had himself carried out to the bogs, where he could personally supervise the working of his machines.

He had his failings, as everyone has, but they were the more excusable in him on account of his many merits. All who learned to know him could not help but see in him a real gentleman. He was a native of Sweden, and made Swedish technical work known and respected throughout a large part of the world.

Peace be with him.

Alf. Larson.

EUROPEAN PEAT SOCIETIES.

Written for the Journal by Dr. Hjalmar von Feilitzen, Director of the Swedish Peat Society, Jönköping, Sweden.

At the first general meeting of the Canadian Peat Society, Mr. A. Anrep, Jr., read a paper on European Peat Societies, which has been published in the Journal of the Society, No. 1, pp 23-27. As this account is somewhat imperfect, and contains some errors, I trust I may be permitted to make some corrections, and add some further facts.

As to the *Swedish Peat Society* (or, as literally translated, The Swedish Society for Cultivation of Peat Land or Peat Bogs, —Svenska Mosskulturforeningen), the name of its founder is Carl von Feilitzen, Director of the chemical and agricultural experiment station in Jönköping, The total yearly income of the Society has increased to $14,603.20 in 1910. The Society has its home in Jönköping, where it owns an Institute, with chemical and botanical laboratories, a Museum with extensive collections of objects related to peat culture and peat as litter, fuel and for other purposes, and offices for the Director and his assistants, and also an experimental garden for pot and plot experiments with peat soil.

Then the Society has two experimental farms, the one at Flahult, seven miles away, and the other at Torcstorp, fourteen miles from Jönköping, where agricultural experiments on peat soils have been carried out on a large scale. Finally also, smaller field experiments have been made in different parts of the country. In 1910 there were sixty-five such experiments in eighteen provinces.

In the laboratory peat for litter is tested as to its absorbent power, and peat fuel with regard to its heating energy (with calorimeter); as well as peat soil for its value for agricultural purposes.

Upon the staff of assistants there are three consulting engineers or experts, who give advice to the owners of peat bogs as to their value after investigation and taking of samples; and the botanist and geologist of the Society is every year making extended investigations of the bogs in different parts of Sweden. Many experiments and investigations into the industrial uses of peat have also been made. In the Journal of the Society, which is issued six times yearly (ca 500 pages), and at the meetings, held twice yearly, there are read and published papers on the uses of peat and peat bogs for both agricultural and industrial purposes.

The *Norwegian Peat Society* (Det Norske Mysrelskap) in Kristiania, has the same objects as the Swedish Society. It has an experimental farm at Maeresmyren, and at present two consulting engineers or experts, one Mr. Thaulow, for the

industrial, and the other, Mr. Lende-Njaa, for the agricultural side of the develop-side of the development of peat lands. During the present year there will probably be engaged two assistants, one for each division. The Society publishes a Journal six times yearly.

Mr. Anrep is at fault in his statement regarding the Peat Societies of *Denmark.* There has existed in Denmark since 1866, a Society for forest culture on the waste heaths in Jutland, called "*det Danske Hedeselskab*", now at Wiborg. That Society, in 1888, added to its program the cultivation of peat bogs, and has two experimental farms, and a great many small fields on peat lands. The government grant for the agricultural section was in the year 1907, together with the incomes from the farms, $25,309.83. The Society publishes a monthly Journal.

In 1901, there was founded by M. Rahbek and others, a Society called "*Moseselskabet*", specially devoted to advancement of the industrial uses of peat, which, in 1908, received a government grant of $2,175, and published a Journal called "*Mosebladet*", which was issued six times a year. But, in 1910, that Society became affiliated with, and now forms a special division of the Danish Heath Society. The Managing Director of the division is Dr. A. Mentz.

The *Finnish Peat Society* (Finska Mosskulturföreningen) in Helsingfors, Finland, was founded in 1895. It publishes a year book comprised of two or three volumes each year, and has two experimental farms. The President and Director of the experiments is the well-known Professor A. Rindell, who has associated with him a botanist, a chemist, and several agricultural experts.

In *Russia* great efforts have been made of late years to rouse interest in the peat question. The Russian government has sent many young engineers to other European countries to study the culture of peat bogs and the peat industry, many of whom have studied for a longer or shorter time in Jönköping. They will now engage for every province (county) one, two or more experts in cultivation of peat lands. This year there will be established at *Peterhof,* the experimental farm of the polytechnicum in Riga, a special course for students of peat land culture.

Two years ago there was organized the *Baltic Peat Society* (Baltischer Moorverein) at Dorpat for advancement of peat culture in Lifland and Estland. Its Manager is Dr. A. von Vegesack. This Society has an experimental farm at Thoma, and publishes a Journal (Mitteilungen).

In *Germany* the study of peat and peat culture has been going on for many years. The *Prussian experimental station for peat culture in Bremen* (Moorversuchstation) belongs to the government, and was founded in 1877. Its first Director was the famous Professor Dr. Fleischer, and Professor Dr. Tacke is now at its head. The station has a big Institute with modern chemical and botanical laboratories, and also an experimental farm at Tostedt in Königsmoor, and many smaller fields. They are working chiefly on the agricultural exploitation of the peat bogs.

The *German Peat Society* (Verein sur Förderung der Moorkultur in Deutschen Reiche) in Berlin was founded in 1883. It publishes a Journal (*Mitteilungen*)

in 24 parts yearly, holds a general meeting every year in Berlin in February, and has small experimental fields, meadows and pastures, on peat bogs. Its Secretary is M. Jablonsky. In October, 1911, a division of the Society was formed, specially devoted to advancement of the peat industry, with Dr. Wolff as Director.

In other parts of Germany the provincial governments have formed divisions for study of peat culture, as in Pommern, where they have a large experimental farm at Neu Hammerstein with M. Freckmann as Director, in Posen, Ostpreussen, Oldenburg, Mecklenburg, and elsewhere.

In *Bavaria* the government founded in 1895 an Institution of its own for peat and peat culture (Königlich Bayerische Moorkulturanstalt), under the directorship of Dr. A. Baumann, Munich. They have chemical and botanical laboratories, five experimental farms and many small fields. The Institution publishes Mitteilungen and a year book.

In *Austria* the government established in 1901 at the imperial *experimental station at Vienna* a division for peat culture and peat industries (Abteilung für Moorkultur und Torfverwertung der K. K. lander Versuchs-station, Wien). The Director is Dr. W. Bersch. To it belongs, also, the experimental farm at Admont in Steiermark. It publishes a Journal called *Zeitschrift fur Moorkultur und Torfverwertung.*

The *German Austrian Peat Soeiety* (Deutsch Oesterreichischer Moorverein), founded in 1900, has its site in Staab, Pilsen, in Bohemia, and its Manager is Mr. Hans Schreiber. It has an experimental farm at Sebastiansberg, where is also to be seen the interesting Peat Museum, and it publishes a monthly Journal (*Oesterreichische Moorzeitschrift*).

Lastly, I will add the communication, that at the Polytechnicum in *Hannover* there has been established a chair for lectures on peat industry, beginning in November 1911, under direction of Professor Dr. G. Keppeler.

POWER FROM PEAT.

(Reprinted from "The Engineer," London, Eng., Dec. 8th, 1911).

A peat power plant has been working at the factory of Mr. Hamilton Robb, at Portadown, since the early part of September, with, we are informed, entirely successful results. The plant, which has a capacity of 400 brake horse-power, consists of two gas producers, each of 200 brake horse-power capacity, coke scrubber, tar extractor, sawdust scrubber, exhauster and expansion box.

Mr. Robb has always had a firm conviction that, sooner or later, he would be able to run his factory with peat from his own boglands at Magherty, as fuel. About eighteen months ago, he accordingly discussed the matter with Mr. Pegg, of the firm of T. L. Miller, Wilson and Pegg, consulting engineers, of Belfast, Liverpool, and Manchester, and it was decided to send some four tons of peat from the Magherty boglands to Crossley Brothers, Limited, of Openshaw, for experimental purposes. Mr. Pegg had had some experinece in the use of peat for this purpose, having, as long as six years ago, succeeded in running a factory, of which he was then works manager, for some ten days on peat gas. He had encountered a number of difficulties, and these, with the active co-operation of Messrs. Crossley, he set himself to overcome. A test was run with the experimental plant at Openshaw in December last, and the result was deemed sufficiently satisfactory for Mr. Robb to be advised to install a 400 horse-power plant for his factory. The result was not achieved without it being found necessary to make sundry alterations in the design of the apparatus, as the experimental plant had not originally been designed to deal with peat; but these matters were satisfactorily settled by Messrs. Crossley and Mr. Pegg, and the plant was put in hand and delivered in August last.

Its operation is extremely simple. The peat is fed by hand into hoppers at the top of the producer, from which it falls by gravitation into the body of the producer as combustion of the lower layers of peat takes place. The gas as it is formed passes through the coke scrubber to the tar extractor, where the tar is separated from the gas by centrifugal action. The gas then passes to the sawdust scrubber, where the final cooling and cleaning take place. It is drawn through the plant by an exhauster in the form of a high speed fan, which delivers it to a gas-holder for use in the engines.

The nature of the gas produced is similar to that of suction gas from Welsh anthracite, though it contains a smaller percentage of hydrogen gas, and the thermal value is slightly more—about 140 B. T. U.

The peat fuel is cut from the boglands at Magherty and dried by the ordinary open-air method. In this way the peat which originally contains about 85 per cent. of moisture, can be dried during an average drying season to contain about 26 per cent. of moisture. During the last exceptional summer the peat was actually dried in the open air to such an extent that it contained as little as 19 per cent. of moisture, as shown by chemical analysis. The plant, however, is designed to work with peat containing up to 45 per cent. of moisture, though naturally it would not be so economical to use peat in such a wet state, because, for one thing, of the excessive cost of carriage in proportion to the effective fuel contained in it. It is interesting to know, however, that the plant will work with such wet peat, for the climate of peat-producing countries is very rarely dry.

The cost of the peat as delivered on the site at Portadown, is 6s. per ton, and the amount of peat consumed per week with an average load on the plant of 275 brake horse-power is slightly under twenty tons. The prime cost of the fuel is

therefore £6, but from this must be deducted the value of the tar recovered from the plant, which averages 35s. per week, which leaves the net cost of the fuel at £4, 5s. We are informed that the factory engines were, previously to the introduction of the peat plant, driven by a coal gas plant which used 8½ tons anthracite per week at a cost of £13, 16s, 3d. With the peat plant, as it is worked at present, one more labourer is required than was found necessary with the anthracite plant, but it is thought that it may be found possible to dispense with this additional labour later on; but allowing £40 per annum for additional wages, the saving effected in the cost of fuel in a factory which contains 500 looms and employs from five to six hundred hands is well over £400, as shown by the above figures.

As regards the working of the plant, the anthracite plant has been kept as a stand-by, and although we gather that it is not now ever called upon, it was found very useful in the early stages of handling the peat plant and before the men got used to the latter. The initial difficulty was in learning how to control the amount

of gas made, as sometimes it was altogether in excess of requirements, and other times it was entirely insufficient. One of the earliest troubles was experienced from a very unexpected cause. Owing to the exceptionally dry summer, the peat which had been stacked to dry near the shores of Lough Neagh had become considerably inpregnated with sand blown from the shores of the Lough.

This sand collected on the grate bars of the producer in the form of a crude black glass, which blocked up the interstices completely and stopped the generation of gas. This trouble was quickly cured by adjusting the amount of air admitted between the bars, and by introducing a certain amount of water vapour into the main air supply to the producers, and no further trouble has been experienced from this cause.

When the plant was originally put down it was arranged to cut the peat fuel into blocks of about 5-inch cube before feeding it into the hoppers. This procedure being found troublesome and expensive, the feed hoppers were altered and the peat is now fed in blocks exactly as they come from the boglands.

The only other trouble experienced has been in connection with the coke scrubber. As the gas passes through this before it reaches the tar extractor, a large amount of tar was thrown down on the coke, especially on the bottom layers, and the scrubber became so rapidly choked that it required attention every five or six days. Eventually the scrubber was modified so as to act as a washer and cooler, the major portion of the coke being removed, and the gas being made to pass upwards against a descending shower of water. The removal of the coke had a double advantage, inasmuch as not only was the initial expense of the material saved, but more tar was thrown out by the tar extractor instead of being deposited in a worthless condition on the coke.

The amount of tar recovered is about 5 per cent. of the weight of the fuel consumed, or say, one ton per week. It is all being sold, and is at present realizing about 35s. per ton. The tar, on analysis, was shown to contain a slight amount of paraffin wax, and a considerable proportion of heavy oils distilling about 270 deg. Cent.

We have been supplied with a copy of an analysis of the tar, which was made by Messrs. Totton and Hawthorne, analytical and consulting chemists, of Belfast, and we reproduce it below:

Sample of Tar No. 1.

On distillation the following fractions were obtained:—

1. Water	49.7	per cent.
2. Light oils (distilling below 230 deg. Cent.)	5.8	"
3. Middle oils (distilling at 230–270 deg. Cent.)	8.0	"
4. Heavy oils (distilling above 270 deg. Cent.)	19.4	"
5. Coke (left in retort)	10.3	"
6. Loss	6.8	"
	100.0	

Much frothing occurred during the distillation owing to the large amount of water present. The final temperature registered by the thermometer was 325 deg. Cent.

The same analysts have also analysed the peat itself, and we give below a record of the results they arrived at:

SAMPLE OF PEAT.

Received on 14th September from Mr. Hamilton Robb, Portadown

Proximate Analysis:

Water	18.98	per cent.
Volatile matter	55.17	"
Fixed carbon	24.75	"
Ash	1.10	"
	100.00	

Ultimate Analysis:

Carbon	44.60	per cent.
Hydrogen	5.42	"
Nitrogen	0.97	"
Ash	1.10	"
Moisture	18.98	"
Oxygen (by difference)	28.93	"
	100.00	

This plant, which is claimed to be the only instance in the British Isles of the direct commercial utilization of peat for power purposes, is now working daily, and giving no trouble whatever. The only operations required are the stoking of the plant and the cleaning of the ashpits. Owing to the open nature of the fuel, it is found that no "poking", such as is necessary with coal plants, is required, which, of course, simplifies the operation of the plant.

BULLETIN 16 OF UNITED STATES BUREAU OF MINES.

THE USES OF PEAT FOR FUEL AND OTHER PURPOSES, by Chas. A. Davis, Bulletin 16, Department of the Interior, Bureau of Mines, Washington, D.C., Government Printing Office, 1911.

Under the above title a very comprehensive text-book on peat has been recently issued by the Bureau of Mines at Washington. Professor Davis in his usual lucid manner deals with widely diverse subjects covering the whole range of matters of special interest to peat men. A few of the chief headings will give some idea of the scope of the work, viz.: Origin and formation of peat ; Physical and chemical properties of peat as related to its fuel value ; Preparation and manufacture of peat fuel ; Manufacture of gas from peat ; Peat as a raw material for products other than fuel ; Agricultural uses of peat ; Tables of analyses ; Selected bibliography on peat. This bulletin will be welcomed as a distinct and valuable addition to the literature on the subject. Applications for copies should be directed to Joseph A. Holmes, Director, Bureau of Mines, Washington, D.C.

Following are a number of extracts selected from Prof. Davis book.

POLICY FOR DEVELOPMENT OF PEAT INDUSTRY.

"As yet no peat-fuel industry can be said to exist in the United States, although much experimental work has been done, and great sums of money spent to establish one. . . .

The peat-beds are a great and neglected resource which, when properly and fully developed will add to our national wealth no inconsiderable quantity of good fuel and of raw material for important arts and manufactures. The discussion will, of necessity, be devoted largely to the uses of peat in European countries, and to the methods of securing marketable products in commercially paying quantities there. Only by carefully considering these can the mistakes and failures of the past be avoided and improvements of existing processes made. . . .

The foundation of all successful development and growth of peat industries in the United States must be a thorough scientific study of the occurrence, nature, qualities, and peculiarities of peat itself, and a careful and honest investigation of the status of these industries in the European countries in which they have reached self-supporting existence. To begin without these preliminary studies would be the height of folly."

(Ed. Thanks to the foresight and energy of Dr. Haanel, Dominion Director of Mines, the policy thus outlined for the United States by Prof. Davis, their leading peat expert, has been already inaugurated in Canada. The sending of Mr. Erik

Nystrom to investigate European methods of peat fuel production, and the subsequent installation of the Anrep machine peat fuel plant at Alfred, Ont., have already borne fruit in the direction of installation of commercial peat fuel plants in Canada. This Society has recently urged upon the Minister of Mines the advisability of further examination into the production of power and by-products from the gasification of peat, as now practised in Europe, and it is hoped that this investigation will be undertaken by the government at an early date.)

General Conclusions on Peat Fuel.

Fuel Value.

"The fuel value of peat as compared with that of coal and wood for firing boilers, furnaces, and stoves has already been discussed at length. The facts presented would seem to demonstrate that although plainly inferior to the best coal in the number of heat units yielded per pound consumed, nevertheless, if prepared in the ways commonly used in Europe peat fuel presents so many desirable qualities, such as freedom from smoke, cleanliness in handling, small ash content, complete and easily controlled combustion, and prospective low price, that there should be a good field for its introduction for manufacturing and domestic uses in those parts of the United States where peat naturally occurs in abundance.

Utilization of Deposits.

There are many small bogs in the peat-bearing regions of the country which, although too small to warrant the establishment of large plants for the production of fuel, could be utilized to furnish machine peat enough for boiler fuel for a single small factory for many years. They might also furnish the power to pump water and generate electricity for a small community for an equal length of time.

The principal matter to be borne in mind in preparing to exploit a peat deposit in such a way is that the simplest equipment which has proved it can yield the desired quantity of usable or salable fuel is the one most likely to give satisfactory returns either in fuel or money. Every added process of treatment beyond that which is necessary to put the peat into usable form for a specific purpose adds many times to the first cost of equipment and to the practical difficulties of making a product that can be sold for enough to pay the costs of preparation and of putting it on the market at a profit.

Producer-Gas Plants.

The present state of knowledge seems strongly to indicate that large peat deposits can be most profitably utilized, and the largest percentage of the stored-up energy in them recovered as power, by converting the peat into producer gas and using this gas in properly designed gas engines. The power may be used by factories operated on the spot, or as electric energy may be used at a distance. Large plants, by using by-product gas producers and thus at least recovering as

ammonium sulphate the ammonia that is formed during the destructive distillation of the peat, may be able from sales of the sulphate to pay a part of the expenses of the whole operation. The by-products process, however, may not be feasible for gas-producer plants of small size, because the costs of installation, maintenance, and supervision are proportionately higher for small than for large plants, and the quantity of by-products obtainable from a small gas producer is not sufficient to keep a recovery plant in operation continuously.

Even without any by-products the use of producer gas presents so many advantages that wherever peat beds are to be used as sources of fuel for power installations of more than 100 horsepower, the possibilities of a producer-gas plant should be given serious consideration.

The producer-gas plant may also be readily adapted to metallurgical work, to firing kilns for brick, porcelain, lime, and probably for cement manufacturing. It might have a large use in roasting ores and, in a small way, in foundries and other iron-working plants, and in reheating and refining steel, copper, and other metals when fuel free from sulphur is required.

Even for boiler plants that could use peat fuel, a gas producer would be a most desirable adjunct, as it would permit the use of peat less carefully prepared and containing more water, and the economy would be greater than in any other way of firing.

Peat Powder.

Next to producer gas, peat powder is the most attractive form of fuel for firing boiler furnaces, for operating kilns of various sorts, and for the metallurgical operations mentioned. This form of peat fuel has not yet been so generally used in Europe as has producer gas, and not as much has been demonstrated commercially in regard to its value. The most recent reports are very favorable and indicate that peat powder can be cheaply produced and is as good fuel for boiler firing when properly prepared and fired as the same weight of good English coal.

Domestic Uses.

The steadiest and, in the aggregate, the greatest demand for peat fuel may be expected to come from small consumers who want a clean, easily handled, and cheap fuel that gives out a steady heat and yet responds quickly to changes of draft when burned in ordinary heating and cooking stoves. Doubtless in this way, as a supplementary and auxiliary fuel, much of the peat that is gathered for fuel will be used.

Peat Coke.

Peat coke is the most efficient solid fuel derived from peat, but its high cost of preparation will doubtless limit its use even more than that of charcoal is now limited. Its value for all uses to which charcoal is now put should find it a ready and satisfactory market after it has once become known to the industries that require such a product."

THE PEAT INDUSTRY IN HOLLAND.

(Translated from a Report of the Royal Minister of Agriculture, Industry and Commerce for the Netherlands.)

Until recently, peat has remained the real national fuel of the Netherlands. Formerly it was used as the principal fuel in various branches of industry, especially in brick and tile works, breweries, glass works, etc. It is still used to supply the furnaces of the factories of the peat-works district of Groningue.

As a result of the long continued use of peat, vast areas of bog, which may be classified as high (drained) and low (undrained) bogs. have been cleared of peat. On the drained bogs, lands which were formerly sterile wastes have become fertile fields, for beneath the covering of peat there is generally a soil, called in Dutch "dalgrond", which is especially adapted for agricultural purposes.

The province of Groningue presents a remarkable example of this. Peat has been systematically taken out there since the sixteenth century, so that to-day almost all the bogs have been cleared, bringing to light the fertile lands which they covered. Potatoes and wheat are now cultivated there, furnishing the raw materials for the starch and straw-board factories. The canals which were formerly dug for the "Veenkolonien" (colonies of peat works), and which are still kept in perfect condition, have greatly favored the development of these industries. The total length of these canals in the three northern provinces is 1562 km.

In the lowland bogs the excavation of the peat has formed basins of water which can be drained later, producing also fertile lands. The exploitation of the

peat bogs has thus greatly contributed to the improvement of the soil of the Netherlands.

The removal of peat from the upland bogs is still being carried on. The following table shows the number of hectares which have been cleared in the last five years, and the extent to which the "dalgrond" has been transformed into arable land.

Year.	Drained bogs worked.	Exhausted and converted into arable land.
	hect.	*hect.*
1905	599	709
1906	469	575
1907	527	520
1908	340	545
1909	364	441

(1 hectare = 2.7 acres).

On the high bogs there is produced a sort of peat called "long peat". The principal districts where this is produced are the east part of northern Brabant, called "De Peel" (Helenaveen and Griendtsveen), the eastern portion of Drente (Emmen, Dalen, Borger, Hoogeveen, Schoonebeek, Westerbork and Smilde), and the eastern part of Overysel (Hardenberd, Gramsbergen and Ommen.)

The approximate production of "long peat" in these provinces is:—

"De Peel"	100	million pieces
Drente	1,200	" "
Overysel	300	" "
Other provinces	200	" "
		" "
Total	1,800	" "

representing a value of about 6½ million florins ($2,613,000).

The low bogs produce chiefly "short peat", the preparation of which calls for a series of operations. Low bogs are found and worked in almost all the provinces, but particularly in southern and northern Holland, and the provinces of Utrecht, Frise, Overysel and Drente. The annual production of "short peat" is about 700 million pieces, divided as follows:

Holland	200	million pieces.
Drente	150	" "
Overysel	120	" "
Other provinces	230	" "

The commercial value of this peat on the ground is $1\frac{1}{2}$ million florins ($603,000).

The market for peat is entirely domestic.

Besides the manufacture of peat by the old methods, there has been developed in the last thirty years a new industry, namely, the production of peat litter, of which various uses are made. The light porous peat of clear brown colour, which covers the surface of the bogs to a depth of 0.50 to 1.50 metres, serves for the manufacture of peat litter.

This work is carried on in factories of which a great number belong to the peat works exploiting this particular sort of peat, and also receiving their raw material from other bogs. The principal peat works possessing at the same time such a factory are located in the southern part of northern Brabant and the western part of Limbourg (Deurne, Asten, Griendtsveen and Helenaveen), where especially a commune and some large associations are engaged in this business; in the north-

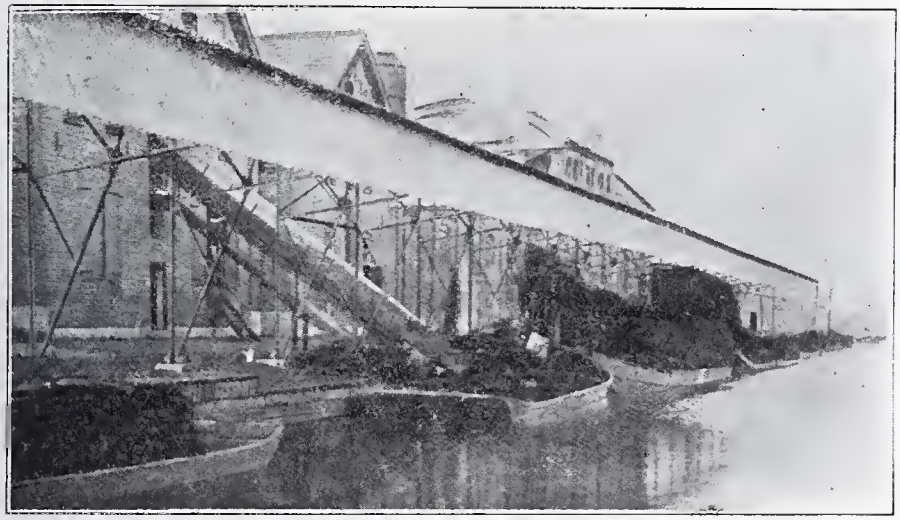

Moss Litter Works at Griendtsveen

east part of the country (Groningue, Drente and Overysel) Dedemsvaart, Hoogeveen, Klazienaveen, Nieuw-Amsterdam, Oranjekanaal and Vroomshoop. The coverings of light turf gradually disappear in Northern Brabant, and for this reason a company which has established factories at Drente on its own bog has great difficulty in maintaining production.

In the factories the peat is ground, dried in the open air by sun and wind, and then compressed in bales of 100 kg. Some of the factories also produce from "short peat," briquettes which serve the same purposes as lignite briquettes.

The use of peat moss litter is growing, and in many cases, particularly in stables, it takes the place of straw. Even recently in spite of the decrease in employment of horses for traction purposes, and their replacement by mechanical traction, the demand for moss litter is steadily growing.

The agricultural use of peat litter is also increasing particularly to cover plants and fields of bulbs.

Mixed in certain proportions with molasses, peat furnishes an excellent cattle food, for which there is a very considerable demand. Peat serves also for the packing of fruits (especially tomatoes).

From the fact that peat litter has such diverse uses, the annual production of the Netherlands (now about 200,000 tons) is always increasing. Only about a tenth of the output remains in the country. The remainder is shipped to England, France, Belgium, America, and Germany. A small quantity is sent to Spain. The export business is carried on chiefly from Amsterdam, Rotterdam and Harlingen. The exportations to France and Belgium go by rail.

Storing Moss Litter for shipment at Rotterdam

PEAT INDUSTRIES LIMITED,

Operating near Farnham, Que.

The work done last season by The Peat Industries, Ltd., while satisfactory in point of production, was more in the nature of pioneer work. Before operations could be commenced in the spring the bog had to be prepared, ditching had to be done, the drying field cleared, and machinery brought in etc., etc.

The main ditch, which is ten feet deep, seven feet wide at the top, and three feet at the bottom, is twelve hundred feet long. The ditching for the surface drainage, of which there is between seven and eight thousand feet, is not as deep or wide as the main ditch, being but three feet deep by about two feet wide.

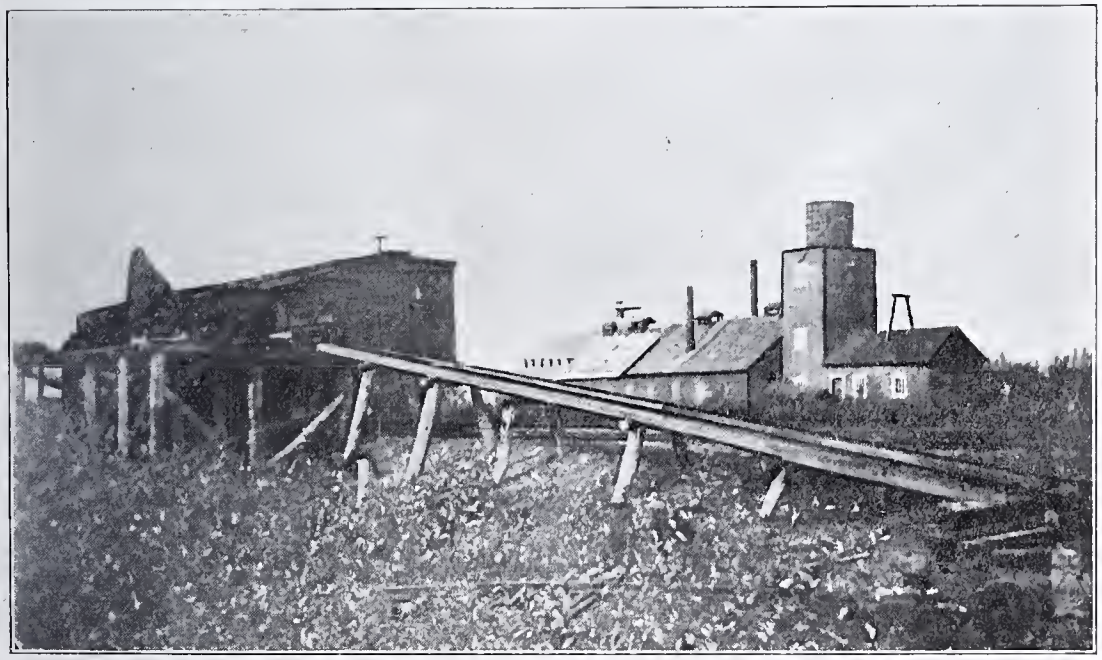

Peat Fuel Works and Shipping Platform

Owing to the bog having previously been undrained, the peat excavated during the season ran high in moisture content, the average sample running from 90 to 92 per cent.

The season for advantageously manufacturing Peat Fuel, was almost over, by the time the Company succeeded in having their machinery delivered and set up, after which there was a certain amount of experimental work carried on in order to perfect the system.

A word about the system used by this Company, might be appreciated. Although it is practically the Swedish System it has been modified to meet the re-

quirements of this country. The whole machine is mounted on one platform, which in turn is mounted on wheels of the caterpillar type by which means its weight of approximately thirty tons is distributed on the bearing surface of the bog, giving a pressure of three pounds to the square inch. On the forward part of the platform is mounted the 50 H. P. gasoline engine from which is derived the power that operates the excavator, the macerator, the delivery system, and also moves the whole machine from place to place as required. In the middle, some-

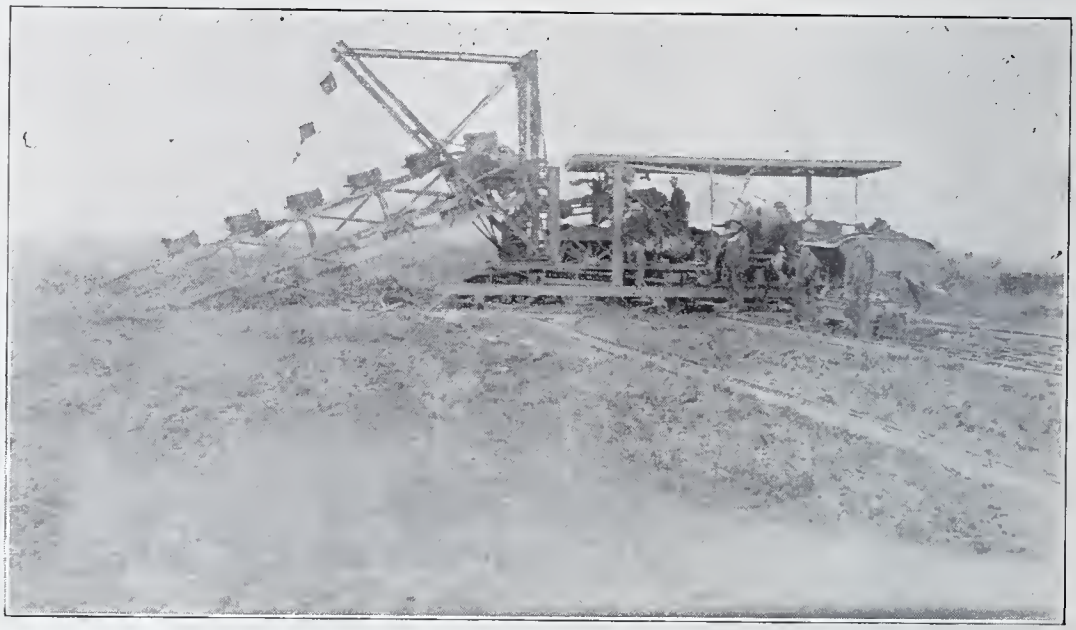

Excavator and Macerator

what to the left of the platform, is placed the macerator, which works into a pulp the raw peat that has been received from the excavator. After thorough maceration this pulpy mass is carried through a spiral conveyor, and delivered to the waiting dump cars. The big excavator boom is situated on the rear end of the platform. On it are mounted bottomless buckets each attached to the other, making an endless chain. This excavator digs a ditch twenty feet wide by ten deep, and under favorable circumstances has a capacity of one cubic yard per minute.

When the dump cars, mentioned as being loaded by the spiral conveyor, are ready, they are clamped to an endless cable which draws them out to the drying field, and eventually empties into the field press, which also travels by endless cable and which spreads out evenly the prepared peat, and cuts it longitudinally by means of revolving disks. The power for hauling the cars, and also for the field press is derived from the engine on the machine.

After the peat has been spread and cut longitudinally it is cut crosswise, by a man who follows the field press and is armed with a double revolving disk for doing the work. When the briquettes have dried somewhat they are turned over, and

after a still further drying are stacked in small pyramids in such a way as to allow a free passage of air to continually circulate between.

When ready for shipment, the loader comes along with a large metal basket which he inverts over the stack. Then by a quick turn the basket is righted, and will be found to contain all the peat of the stack, which is then thrown into the cars to be carried from the drying field to the shipping point.

This process of handling the prepared peat, was found to be the one weak point, where the cost was all out of proportion, and to remedy it the Company have had their engineers working on plans during the past winter. The result is that dump cars of a special design are being built, rails for a permanent railway are being laid, and locomotives of the internal combustion type are to be used to draw the trainloads of finished produce from the drying field to the point of shipment. The locomotive will draw the cars up on the shipping platform, from whence they are dumped directly into the regular railway cars. The new shipping platform is built sufficiently large to allow the loading of three cars simultaneously.

The prospect of a market for the fuel manufactured, is one of the least things to be considered. Of last years product, not one ton remained unsold, and what speaks well for the quality is that wherever it was used, enquiries are coming in daily for supplies for 1912. One industrial concern who with the greatest doubts gave it a trial last year are now discarding anthracite coal entirely and substituting peat.

Should the season of 1912 be a favourable one for the manufacturing, peat will be introduced into our daily life, more than ever before, and through it we can become at least in a measure freed from the leash of the Coal Baron.

Journal of the Canadian Peat Society.

Published Quarterly by

THE CANADIAN PEAT SOCIETY

22 Castle Building, Ottawa, Can.

OFFICERS: 1911–12

Honorary President: Dr. Eugene Haanel, Director of Mines, Ottawa, Can.
President: J. McWilliam, M.D., London, Ont.
Vice President: J. M. Shuttleworth, Brantford, Ont.
Executive Committee: A. W. Fleck, John R. Reid, and Frank Pedley.
Secretary-Treasurer: Arthur J. Forward, B.A., Barrister, 22 Castle Building, Ottawa, Can.

Subscription Price (4 numbers) **$1.00**
Advertising rates will be furnished on application.
Remittances may be made by cheque (payable at par in Ottawa), draft, money order, or postal note to the Secretary-Treasurer of The Canadian Peat Society, 22 Castle Building, Ottawa, Can.

EDITORIAL.

Since the appearance of our last issue one of the most prominent figures in the peat world, Engineer Aleph Anrep of Helsingborg, Sweden, has been removed by death. For the past thirty years or more Mr. Anrep's name has been a household word among peat men the world over, and he has left his impress upon the industry in many countries outside his native Sweden. When the Mines Branch investigated conditions governing the production of peat fuel in Europe four years ago, the Anrep peat machine was selected for demonstration in Canada as the best available, and a small plant was installed at Alfred, Ont. The successful results of that installation are well known, and have led to the proposed erection this season, by private capital at Alfred, on a portion of the Government bog, of a much

larger plant, including the new mechanical excavator devised by Anrep. We print in this number a translation of an appreciative article on Mr. Anrep's life and work, written for the Swedish engineering Journal, "Teknisk Tidskrift", by Mr. Alf. Larson, who is himself among the leaders of the peat industry in Sweden.

Our readers will peruse with interest the important article on European Peat Societies which has been kindly contributed to the Journal by Dr. Hjalmar von Feilitzen, Director of the Swedish Peat Society. On this continent also, there is evidence of an awakening, not only to the value of the resources lying neglected in our peat bogs, but to the necessity for thorough and scientific study and research, if our efforts to develop these resources are to be rewarded by financial success. This is only possible through organization and exchange of ideas and experiences, which will lead to the sifting out of the wheat from the chaff. The Dominion government has already taken substantial action in the way of aiding such co-operative study and investigation by making a grant of $1,500 to the Canadian Peat Society for carrying on educational work. And it may be expected that the governments of the Provinces as well, will be ready to assist in any well-considered plans for the advancement of the peat industry.

We republish from "The Engineer", London, England, a short description of a peat gas producer power plant at Portadown, Ireland. This installation, made by the well-known firm of Crossley Brothers of Manchester, will be particularly interesting as indicating the possibility of profitable utilization of comparatively small bogs in production of power, where such power can be locally used to advantage.

Two publications of official character which have recently appeared are the Report of the Royal Minister of Agriculture, Industry and Commerce for the Netherlands on the peat industry of Holland; and the Bulletin on peat written by Prof. Charles A. Davis and issued by the United States Bureau of Mines. This latter is quite comprehensive in its scope, and we have attempted no more than to make a few excerpts shewing the general policy advocated for the United States by Prof. Davis, and his general conclusions on the subject of peat.

Owing to the fact that the season was far advanced before the new plant of Peat Industries Limited was fully installed at the Farnham bog, and considerable experimental work was done during the summer, the Company are not yet in a position to make public any detailed statement of their operations. The plant is in charge of Mr. Gus. E. Carlsson, a man of recognized ability and experience, and results of the coming season's work will be awaited with much interest.

It may now be definitely stated that the operation of the Government Peat Plant at Alfred, Ont., will not be continued during the coming summer. Under an agreement made by the Department of Mines with private parties, the latter have been given permission to erect, on a portion of the government bog, a large plant, equipped with mechanical excavator and other improvements, which will be built and operated entirely by private capital. The installation of this plant may be said to mark the successful conclusion of the government's undertaking at Alfred, which was to demonstrate the commercial production of machine peat fuel to the point where private capital would step in, and follow up the results obtained.

It should be generally understood, however, that owing to the introduction of mechanical equipment in the new installation, a good deal of time and labor will be devoted during the first season's operations to the perfecting of the plant and experimental work. Notwithstanding this, the managers of the enterprise anticipate a considerable production of fuel in 1912, though of course, nothing approaching the full capacity of the plant.

We desire to express hearty appreciation of the cordial manner in which the Journal has been received by the press generally, of the kindly references made both to the Society and its Journal, and of the expressions of good will and hope for our future welfare. Following are a few extracts from the Canadian press:—

The Society is doing good work, and should have the hearty support of the federal and provincial governments. Depending on a foreign country for a fuel supply which could be cut off at any time is a bad position for any country to be in. The development of the peat bogs will mean much in relieving the situation.

PETERBORO EXAMINER, January 9.

Vol. 1, No. 1 of the Journal of the Canadian Peat Society has been issued and makes a favorable impression.

WINDSOR RECORD, January 11.

The Warder is in receipt of a copy of the Journal of the Canadian Peat Society, and in kindly acknowledging the same, we offer our very best wishes for its future success. In its columns will be found reliable information as to the standing of the peat industry in Canada. The use of peat as an article of fuel has been clearly demonstrated to have passed its initial stage, so its use and manufacture will not be dependent upon conjecture as to its heating and power producing properties. The style and well-written articles together with its reasonable rate of subscription should merit for the Journal a large and substantial list.

LINDSAY WATCHMAN-WARDER, January 8.

This work of redeeming the peat bogs is the finest kind of conservation of resources.

MONTREAL WITNESS January 18.

Under the presidency of Dr. Haanel, Director of Mines for the Dominion government, there has been started at Ottawa a Society, known as the Canadian Peat Society, having for its object the advancement of the peat industry in Canada. This is an important work for two national reasons. First, we are very much dependent for fuel on American sources; and, secondly, it would mean another and very profitable industry for Canada. . . . In 1909, Canada imported coal from the United States to the amount of nearly 10,000,000 tons, valued at $26,831,859. The development of some of our extensive peat bogs will help to keep some of the money at home, and to furnish additional employment to Canadians in Canada. . . . In their work of turning the barren wastes into profitable fields of labor, the Canadian Peat Society are doing a truly patriotic work.

PRINCE RUPERT NEWS, January 16.

COMMISSION OF CONSERVATION.

At the Third Annual Meeting of the Commission of Conservation held in Ottawa, in January, the Chairman, Hon. Clifford Sifton, introduced the subject of peat fuel. In the course of the memorandum which he had prepared he said:

"There is no possible source from which cheap fuel can be procured to take the place of what is now being used which, in any respect, compares with peat. Ontario has an enormous area of peat bogs. The trouble heretofore has been that, until a very short time ago, the method of treatment was not economically successful, and it does not appear to be realized that, at the present time, that difficulty has been overcome and that an economically successful method of treating peat is now in existence and has been practically demonstrated within a few miles of Ottawa within the last two years. So, it is now a fact that, economically and commercially, the immense peat bogs of the Province of Ontario are available for fuel if a very small amount of commercial enterprise is used in connection with the subject.

"I am bringing this matter before you especially because of its great economic importance and because of the fact that I think the movement requires a little support at our hands. It quite frequently happens that in important branches of work of this kind you get to the point of doing very valuable work when, for some reason or other, you are shut off. There is obviously some little movement being made at the present time to shut off the activity in the development of peat fuel, and I think this is a proper case for the Commission of Conservation to exert what little influence it may have, to declare its position on this question and to use its influence on the Government to induce them to carry on this important work."

Later in the same day a brief discussion ensued, and a resolution was adopted, as follows:—

MR. SIFTON.—You will remember that this morning I read a memorandum on the subject of peat. A new government is in power, and the Minister may not

have the opportunity to study the question, or get any information for a year. He is busy with other things, and, of course, he cannot have studied the question as we have. It would be well for us to express ourselves strongly on the subject.

Senator Edwards.—It is really practically determined that this peat can be produced, there need be no question about the value of it?

Mr. Sifton.—Not a bit in the world. They produce power for not more than two-thirds of what it costs when burning coal, rather less than that, and they have produced fuel for stoves and grates which is of excellent quality. I cannot imagine anything that will be a greater boon to the community in general than the development of this fuel, which seems to be on the point of successful development. Until four or five years ago it had never been economically produced in this country.

Senator Edwards.—What is the nature of the recommendation you wish for?

Mr. Sifton.—I think what we ought to do is to place on record our appreciation, from the standpoint of conservation, of what has been done, and I would say that we ought to suggest to the Government that any further investigations along the line that are recommended ought to be pushed forward, and that the money for them will be very well spent. If you approve of my view the Secretary will put the motion in proper form.

Dr. Jones.—I have much pleasure in moving that the Commission take action on lines suggested by the Chairman. I would move, seconded by Senator Edwards,—

THAT the Commission of Conservation approves of the investigation that has been carried on by the Mines Branch of the Department of Mines in connection with the commercial use of peat, and suggests that further investigations and experiments be made with a view to making the proposition still more attractive to the people.

The Commission also places on record its appreciation of the work of investigation that has been done."

Not only will the attitude of the Commission of Conservation towards the peat industry be a source of gratification to the men who are working for the advancement of this branch of industry in Canada and elsewhere, but their active support will be of immense service in aiding its development along practical lines and on a sound basis.

DRYING PEAT BY ARTIFICIAL HEAT.

Millions of dollars have been wasted in Canada and other countries in efforts to dry peat artificially to say 15 to 20 per cent. moisture content. The seriousness of the problem involved appears from the following table extracted from Prof. Chas. A. Davis' new book, The Uses of Peat.

Weight of water evaporated from a ton of peat as its water content is lowered, by 10 *per cent. stages, from* 90 *per cent. to* 10 *per cent.*

Percentage of water in peat.	Total dry-peat content.	Water content.	Water evaporated for each 10 per cent. reduction.	Residue left for each 10 per cent. reduction.	Total amount of water evaporated.
	Pounds.	*Pounds.*	*Pounds.*	*Pounds.*	*Pounds.*
90	200	1,800·0	.....	.....	.....
80	200	800.0	1,000·0	1,000·0	1,000·0
70	200	466·7	333·3	666·7	1,333·3
60	200	300·0	166·7	500·0	1,500·0
50	200	200·0	100·0	400·0	1,600·0
40	200	133·3	66·7	333·3	1,666·7
30	200	85·7	47·6	285·7	1,714·3
20	200	50·0	35·7	250·0	1,750·0
10	200	22·2	27·8	222·2	1,777·8

Thus, taking a ton of raw peat as it comes from the bog with 90 per cent. moisture, one thousand pounds of water must be evaporated to reduce it to 80 per cent. moisture content, and 1,600 lbs. to reduce it to 50 per cent. To lower the percentage of water from 90 per cent. to 80 per cent. requires evaporation of 1,000 lbs. of water, while the last 10 per cent. reduction from 30 per cent. to 20 per cent. to complete the fuel requires evaporation of only 35.7 lbs. of water.

At 20 per cent. moisture content, the original ton is reduced to 250 lbs. So that in order to produce one ton of marketable fuel containing 20 per cent. moisture, it is necessary to lift 8 tons of material from the bog, and evaporate 14,000 pounds of water.

For the latter purpose no means has yet been discovered to compare in cheapness and efficiency with the action of the sun and wind in the air-drying process.

As for the other, the next few years will likely see considerable advance in the mechanical handling of peat, thereby materially reducing the cost of the finished product.

Investigation of European Peat Gas Producer Plants.

On February 1st, a deputation from the Canadian Peat Society, accompanied by Mr. A. W. Greene and Mr. John McKinley as representatives of the Ottawa Board of Trade, waited on Hon. B. Nantel, Minister of Mines, to present a petition asking for an investigation by the Department's engineers of recent installations in Great Britain and Europe of plants for the production of power from peat gas, with recovery of by-products. The following is the text of the petition, which was largely signed by parties interested in peat in Canada.

We, the undersigned members of the Canadian Peat Society, and others interested in the utilization of the peat resources of Canada, respectfully submit that:—

1. The action of the Dominion Government in investigating the conditions of manufacture of peat fuel in Europe and demonstrating its production by methods there in commercial use has already led to valuable results, and is likely to prove of material assistance in the establishment of a Canadian Peat Fuel Industry.

2. One of the most promising fields for the utilization of peat, and one of the most important to Canada, is in the production of peat gas for power purposes, as successfully carried out on a large scale at Oldenberg, Germany, and several other points in Europe.

3. While operations at the government fuel-testing plant have resulted in much valuable information being acquired with regard to peat gas producer plants, before any larger installations can be commercially attempted with safety in Canada, much remains to be learned as to the actual working of large unit plants, which can only be ascertained through personal inspection by qualified persons of plants in actual operation.

We would, therefore, respectfully recommend that an engineer or engineers be sent by your Department to investigate and report on the leading peat gas power installations of Europe with a view to ascertaining the best system and plants for use in Canada.

The deputation was favorably received, and it is hoped that early action will be taken in accordance with the prayer of the petition.

PEAT AS A FERTILISER.

The following item from the St. Thomas Journal of February 23rd, 1912, will be of interest to peat men:—

"Peat from the Lake."

"Tobacco Growers Find it Excellent as Fertiliser."

BLENHEIM, February 20.—" The Lake Erie shore, south of Cedar Springs, has been a busy place during the good sleighing, which has now gone. Tobacco growers for miles around arrived there with their teams and sleighs to get peat for their 1912 tobacco beds.

This peat is got from under the lake a short distance from the shore. The ice is picked off, and the frozen ground underneath picked away, and there is a good depth of rich, black peats."

This use of peat is particularly interesting in view of the results said to have been recently obtained in Great Britain and Europe in the gasification of peat, and consequent production of power, with saving of by-products. It is stated that the value of the by-products thus obtained will alone more than pay all operating expenses, leaving the power produced practically free of cost. Whether this be true or not this line of development of the peat industry is certainly one of great promise.

The principal by-product resulting from the gasification of peat in such a plant is ammonium sulphate, which is a valuable fertiliser finding ready market in Great Britain and Europe at about $60 per ton. As most of the bogs thus far examined in Canada are rich in nitrogen, and a number of these are located in the vicinity of towns which could use to advantage the power produced from the peat gas, this development may prove of great practical importance to this country. While a market abroad could be found for the output of fertilisers for some time to come, there is a growing demand for these products in Canada, as shown by the reports of the Department of Trade and Commerce.

The following table shows the importations of fertilisers into Canada during the past four years:—

	Dutiable.	Free.	Total.
1908	$259,132	$110,034	$369,166
1909	341,102	131,573	474,675
1910	350,907	130,549	481,456
1911	399,597	146,560	546,157

According to the Canadian Statistical Year Book the imports in 1902 amounted to $84,996, and in 1903 to $112,256. The present large volume, and the rapid rate of expansion of this trade indicate that an important industry may before long be built up in supplying the local demand.

PEAT PRODUCTS.

"Your Commissioner is informed that considerable quantities of peat moss litter are imported into Bristol from Germany, and other Continental sources of supply. As the subject of peat production, in view of the extensive peat areas that are known to exist in Canada, is one that may become of value there, it may be of interest to know that there is a market here for this material, and at the present time a company is engaged at Ashcott, Somerset, in the manufacture of peat moss, litter, burning peat, peat soil and peat fire lighters, which your Commissioner is given to understand are sold here at a price that leaves a very good margin of profit. A small pamphlet issued by this company is forwarded with this report, and can be seen at the Department of Trade and Commerce at Ottawa by any person interested in the subject."

Extract from report of E. D. Arnaud, Canadian Trade Commissioner at Bristol, England, December 20, 1911.

The prices quoted by the firm mentioned for their various products, as furnished by the Canadian Trade Commissioner at Bristol are as follows:—

Moss Litter, 22 shillings per ton, Peat Fuel, 16 shillings per ton, Peat Dust, 25 shillings per ton, Peat Soil, 12 shillings per ton, Peat Fire Lighters 12 shillings per crate of 30 six-penny packets, all F.O.B. at Ashcott.

The peat is cut by hand and air-dried. It is stated that one ton of Moss Litter is equal to about 2½ tons of straw, and after use as bedding makes 7 tons of manure.

Peat Moss Dust is ground finer than the litter, and is used in poultry houses, earth closets, and cess-pits, and is in good demand for sewage farms and sewage works, on account of its absorbent and deodorizing qualities. It is also used in many branches of horticulture by leading nurserymen and market gardeners. Peat Moss Dust is of special value for preserving ice, being a non-conductor. It is also used in the preparation of foods for fattening cattle, as it readily absorbs and retains all the ingredients necessary to a good rich food, and at the same time does not become sticky or difficult to handle.

Peat Fire Lighters are made from solid blocks of peat, sawn to the required size (about 2½ inches long by 1 inch square) and saturated with pitch. They do not crumble, are impervious to damp, and will not soil the hands. They are packed in boxes of 48 for six pence.

It should be profitable for manufacturers of peat fuel in this country to investigate the possibilities of some of these side lines or by-products of the peat industry, since to make the business a commercial success, the lighter surface peat, which is of comparatively small value for fuel purposes should be turned to the best account possible.—Ed.

ONTARIO PEAT BOGS, SYNOPSIS OF 1909 AND 1910 INVESTIGATIONS.

During the seasons of 1909 and 1910, ten bogs in the Province of Ontario were examined by the Mines Branch of the Department of Mines. For the sake of convenience, we present, in tabular form some of the results of these investigations. For comparative analyses shewing quality of peat, and other more detailed information, Bulletins 1 and 4 of the Mines Branch should be consulted.

BOG.	Approx. Areas (acre.)	Less than 5 ft. deep (acres.)	5 to 10 feet deep (acres.)	10 to 15 feet deep (acres.)	Over 15 feet deep (acres.)	Contents (cub. yds.)	Est. workable volume (cub. yds.)	Est. fuel production with 25 % moisture. (tons.)	Location and Shipping Facilities.
*Mer Bleue.....	5004	1564	2237	856	347	56,050,711	38,442,494	5,125,655	Eight miles from Ottawa, on C. P. R. and G. T. R. lines.
*Alfred.....	6800	1377	3084	1316	1014	100,182,456	70,270,200	9,369,000	Forty-four miles from Ottawa, on C. P. R. line to Montreal.
*Welland.....	4900	1423	2877	588	....	50,975,000	30,796,480	4,106,000	Six miles from Welland, Ont, on Welland Canal.
*Newington.....	3800	929	1191	748	974	62,913,813	46,566,478	6,208,800	Forty miles from Ottawa, on N. Y. & O. Ry.
*Perth.....	3800	678	958	2098	106	55,522,984	38,445,222	5,126,000	One and one-half miles from Perth, Ont.
*Victoria Road....	67	36	15	12	4	638,709	402,441	53,000	One mile from Victoria Road, Midland Div. G. T. R.
†Brunner.....	2288	1260	1028	....	....	15,687,545	8,790,979	1,098,872	Eight miles from Stratford, Ont.
†Komoka.....	900	605	295	....	....	4,786,667	1,903,733	237,966	Two miles from London, Ont., on C. P. R. and G. T. R.
†Brockville.....	1400	356	475	490	79	18,601,464	12,705,969	1,525,749	Three miles from Brockville, Ont., on C.P.R.
†Rondeau.....	1571	959	316	207	89	13,985,477	7,856,581	982,072	Six miles from Blenheim, on Lake Erie.
	30,530					379,344,826	256,180,577	33,833,114	

*For further particulars see Bulletin No. 1, Department of Mines, 1909.
†For further particulars see Bulletin No. 4. Department of Mines, 1910.

PATENTS RELATING TO PEAT ISSUED BY THE CANADIAN PATENT OFFICE IN 1910 AND 1911.

	Number.	Date	
		1910.	
Peat cutting machine—Moulton to N. E. Fuel Co	123,131	Jan.	11
Cable traction system for travelling peat press—N. Fredriksson	123,877	Feb.	15
Plant for digging and working peat—N. Fredriksson	123,878	Feb.	15
Press for extracting water, liquids or juices from peat, etc., X. M. Rous	123,924	Feb.	15
Drying apparatus for peat and the like —Matheson to Farmer	124,384	Mar.	15
Peat fuel manufacturing machine—F. X. Frank	124,851	Apr.	5
Peat, marl, clay, lime, etc., drier—D. Diver	125,742	May	17
Process of manufacturing fodder composed of peat and molasses—E. Joseph	125,908	May	24
Peat preparing process—W. H. Bradley	126,206	June	7
Peat dredging engine with dredging cutters working in the travelling direction—W. Wielandt	126,536	June	21
Means for producing electric currents from peat—J. D. Oligny	126,650	June	28
Treatment of substances and peat to be dried by pressing—T. Franke	126,748	July	5
Elevator for extracting peat from peat bogs—A. Anrep	129,958	Dec	29
		1911	
Peat conveyors, automatic rope arrangements for transporting carriages rolling on a shifting circular track—A. Anrep	130,479	Jan.	17
Peat digger—T. G. Amsden	131,446	Mar.	7
Peat drier—T. G. Amsden	131,447	Mar.	7
Plant for manufacture of peat briquettes—T. Franke	131,478	Mar.	7
Process of manufacturing peat briquettes—T. Franke	131,637	Mar.	14
Peat spreading and cutting machine—L. Krupp & Peat Industries Ltd	134,138	Mar.	21
Manufacture of moulded articles from peat—Pearson & Stoneham	135,511	Sept.	12
Peat plant—L. B. Lincoln	135,818	Sept.	26

NEW MEMBERS.

It should be the aim of every member of the Canadian Peat Society to aid in extending the influence of our Society and increasing the usefulness of its publications by securing as many new members as possible. There are thousands of people interested in agriculture, in fuel supply, in power and power production, and in chemical and technical work, to whom the development of the peat resources of Canada is of interest. We would, therefore, urge one and all to lend their assistance by sending in applications of such parties for membership in the Society, and by communicating to the Secretary addresses of others likely to be interested. A number of copies of the first issue of the Journal are still available to supply new members who may wish to possess a complete file.

New Members added to the Society since the issue of the last number of the Journal.

Beck, Hon. Adam—London, Ont.
Beswick, Wilfrid, Esq.,—Stockton-on-Tees, England.
Bickerdike, Robert, M.P.—Montreal, Que.
Binet, Rev. J. L., B.A., Ph.D.—University of Ottawa, Ottawa, Ont.
Briggs, O. P.—Minneapolis, Minn.
Carter, W. E. H., B.A. Sc., M.E.—Toronto, Ont.
Craig, J. M.—New York, N. Y.
Davis, W. A. Pollock—Philadelphia, Pa.
Day, W. H., B.A.,—Agricultural College, Guelph, Ont.
Deslongchamps, L. P., Manager "Le Devoir", Montreal, Que.
Erbes, L. C.—St. Paul, Minn.
Fisher, T. J.—Montreal, Que.
Fleming, Sir Sandford, K.C.M.G.—Ottawa, Ont.
Foersterling, Dr. H.—Perth Amboy, N. J.
Fuel Engineering Company—New York, N. Y.
Garrison, J. H.—Los Angeles, Cal.
German Kali Works—New York, N. Y.
Gregory, James S.—St. John, N.B.
Guttman, Dr. Leo. F.—School of Mining, Kingston, Ont.
James, C. C.—Deputy Minister of Agriculture, Toronto, Ont.
Library of Parliament—Ottawa, Ont.
Lindquist, E.—Royal Swedish Consul, Montreal, Que.
McBride, Hon. Richard—Victoria, B.C.
McGill College Library—Montreal, Que.
McKenna, Dr. Chas. F.—New York, N. Y.
Mills, A. L.—Mexico City, Mex.
Northwestern Drainage Company—Grand Rapids, Wis.
Pennsylvania State Library—Harrisburg, Pa.
Philipp, Herbert—Perth Amboy, N.J.
Pope, Allan, M. E.—Buffalo, N.Y.
Ranson, Robert—St. Augustine, Fla.
Ross, Hon. W. R.—Minister of Lands, Victoria, B.C.

Sawyer, D. Smiley—Ottawa, Ont.
Smith, Frank Morse—New York, N. Y.
Snowball, W. B.—Chatham, N.B.
Sothman, P. W., Chief Eng. Hydro-Electric Commission,—Toronto, Ont.
Staff, Charles—Detroit, Mich.
Stewart, John T.—St. Paul, Minn.
Sudor, Anthony—St. Paul, Minn.
Walker, Stratman & Company—Pittsburg, Pa.
White, James, Secretary, Commission of Conservation—Ottawa, Ont.
Wood, J. P.—Chatham, N.B.

Double Number

Vol. 1 MAY and AUGUST, 1912 Nos. 3 & 4

JOURNAL

OF THE

CANADIAN PEAT SOCIETY

Published Quarterly by the Society
Subscription Price - $1 per annum
Single Number - Twenty-five cents

CANADIAN PEAT SOCIETY
Room 22, Castle Building Ottawa, Canada

(Copyright, Canada, 1912 by the Canadian Peat Society.)

TABLE OF CONTENTS

PAGE.

1. Abstract of Report on the utilization of peat fuel for the production of power, by B. F. Hannel, B. Sc. 3

2. Commercial utilization of peat for power purposes, H. V. Pegg. 28

3. European Power Plant Practice, Francis G. Wickware. (From the Practical Engineer.) 33

4. Present Status of the Diesel Engine—From "Power." 35

5. The Internal Combustion and the Gas Producer. (Editorial from The Canadian Engineer.) 37

6. Peat and its utilization for power purposes 38

7. Peat as an agricultural asset.—Thos. S. Gladding, A. M. 39

8. Editorial 45

Patents relating to peat issued by the Canadian Patent Office 49

Coal Statistics, 1892-1911. 53

Canada's Supply of Coal 54

American Peat Society's Convention 56

Peat Production 58

By-Product Gas-Producers 58

The Producer-Gas Engine as a Factor in Conservation 60

Peat in New Ontario 61

Electricity from Peat 61

Index to Vol. I 62

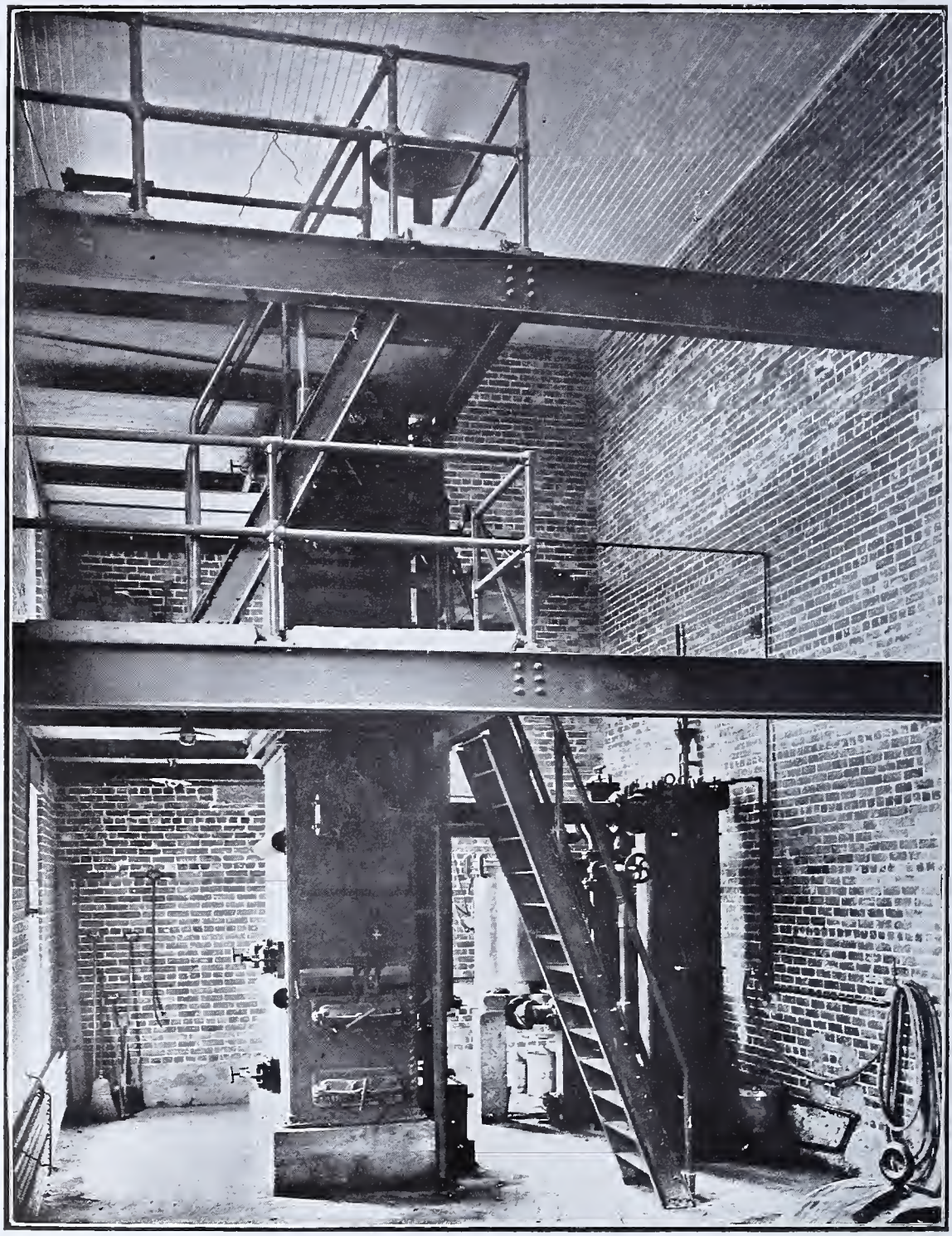

GENERAL VIEW OF PEAT GAS PRODUCER

Journal of the
Canadian Peat Society

Vol. 1 MAY and AUGUST, 1912 Nos. 3 & 4

ABSTRACT OF REPORT ON THE UTILIZATION OF PEAT FUEL FOR THE PRODUCTION OF POWER; AN ECONOMIC INVESTIGATION.

By B. F. Haanel, B.Sc.

With a view to ensuring an orderly arrangement of the resultant record of the experiments conducted with peat fuel, for the production of power through the medium of the gas producer, the report is divided into two parts:—

I. Description of the Korting producer gas plant, and cleaning system —as originally constructed and installed at the Fuel Testing Station, Ottawa; together with complete detailed records of the trials and tests conducted therewith;

II. Description of the alterations made to the producer plant by the makers; added to which are complete detailed records of the trials and tests conducted after the alterations had been made.

PART I.

INTRODUCTION.

The numerous requests received at the Mines Branch for information concerning the economic utilization of peat in a producer-gas power plant, led to the preparation of the present report. The primary object in establishing a Fuel Testing Station at Ottawa was, to demonstrate that peat could be economically utilized as a fuel for power purposes in a producer-gas power plant. Since then, it has been decided to extend the scope of the investigations, namely, to include the testing—on a commercial scale and in a commercial

(Report on the Utilization of Peat Fuel for the Production of Power. Being a record of experiments conducted at the Fuel Testing Station, Ottawa, 1910, 1911. By B. F. Haanel, B.Sc., Chief of Fuel Testing Division, Mines Branch, Department of Mines, Ottawa, Canada. Government Printing Bureau, 1912.)

gas producer—of the bituminous coals of the extreme eastern and western provinces, and of the lignites of Manitoba, Alberta, and Saskatchewan.

The producer-gas plant was installed at the Fuel Testing Station for testing the various kinds of fuels met with in Canada, in order to show, principally, the great saving in fuel which could be effected by its use. Some years ago it was scarcely safe for an engineer to recommend a producer-gas power plant as a substitute for steam power, on account of the unreliability of the former; but, to-day, the improvements, both in the design and method of operation—the result of many years of experimentation—have rendered this type of power plant thoroughly reliable. The ordinary steam power plant—ranging in capacity from 50 to 200 horse-power—consumes about 7 lbs. of coal per brake horse-power hour; assuming the coal to have a heating value of 12,500 British thermal units per lb. This statement, it must be understood, only relates to average small steam power installations. In larger and more elaborately designed steam power plants, as, for example, the power plant of the Interborough Rapid Transit Company, of New York, the consumption of fuel of the same heating value is in the neighbourhood of only 2 lbs. This fuel consumption—of probably the most economical steam power plant on the continent—affords a notable contrast to the fuel economy of a modern producer-gas power plant, viz., 1¼ to 1½ lbs. of coal, of the above heating value per B.H.P. hour. Although far better economy than the above has been recorded for producer-gas power plants, the writer has chosen to use a conservative figure, which can be easily attained without the assistance of expert producer operators. This fuel economy, moreover, is realized with the small producer-gas plant as well as with the large; while the maximum efficiency of the steam plant is generally only attained with the largest and most elaborate installations. Cases can, of course, be cited of certain small steam plants, where the fuel economy—for a steam plant—is remarkable. This, however, does not affect the above figure, of 7 lbs. of fuel per brake horse-power hour, which the writer believes is a fair average fuel consumption for the ordinary steam plants of from 50 to 200 horse-power capacity, met with throughout the country.

The absence of smoke and smoke-stack; simplicity of operation and design—especially in the smaller suction producer-gas power plants—and safety in operation, are a few advantages, apart from the great saving in fuel, which would recommend such a plant to power producers.

The great saving in fuel effected by the use of producer-gas power machinery will be most apparent in those places which are removed some distance from coal mines, and especially in the western provinces possessing lignite deposits.

The above remarks apply especially to the central provinces, in which

large areas are covered by peat bogs, but which possess no coal or known lignite deposits of economic value. In these provinces, where all the coal used for industrial purposes is imported from some foreign source, the necessity for reducing the amount needlessly used is most urgent. Moreover, since the producer-gas power plant can efficiently utilize some of the cheapest and lowest grades of coal which are not suitable for steaming purposes, the saving in fuel bills, resulting from the use of these low-grade fuels, will be apparent to most power producers.

Before deciding upon the types of producers desirable to install at the Fuel Testing Station, a careful study of the question was made both in European countries and in the United States, and as a result, two producers, which were shown to be commercially successful, were purchased.

The slow development, in Canada, of this class of power plant, is partly due to lack of reliable information concerning the gas producer and gas engine, generally, and the type or design suitable for the special fuel it is desired to utilize—and particularly to the failure of some plants which were guaranteed to satisfactorily operate with fuels for which they were supposedly designed. While instances of this kind are not common, yet, a few failures are sufficient to cause manufacturers, power producers, and others, to lose confidence in everything pertaining to such a system.

By publishing the results of the investigation of the various fuels tested in the producers at the Fuel Testing Station, it is hoped that those power users who have been unfortunate in their selection of a gas producer and engine, and hence have lost confidence in the gas producer and gas engine as a reliable and economic method of producing power, will have their confidence restored, and their interest reawakened to the great possibilities of the producer-gas power plant as a means of producing cheaper energy than can now be obtained with the steam power plant.

Since this report may be read by many business men who are interested in the development of peat bogs as a source of fuel for the production of power, and who may not be possessed of the same degree of knowledge concerning the producer-gas power plant as they possess of steam power plants, especial care has been taken to describe, as minutely as possible, the apparatus entering into such a plant.

The erroneous notions which the writer has often heard expressed concerning the gas-engine have led to a more detailed description being given of both the theoretical principles governing its operation and the respective parts of which it is constructed, than is usual in government technical publications. With this practical object in view, illustrated descriptions of the gas-producer and gas-engine, and their auxiliary apparatus, have been inserted in the text —wherever deemed necessary.

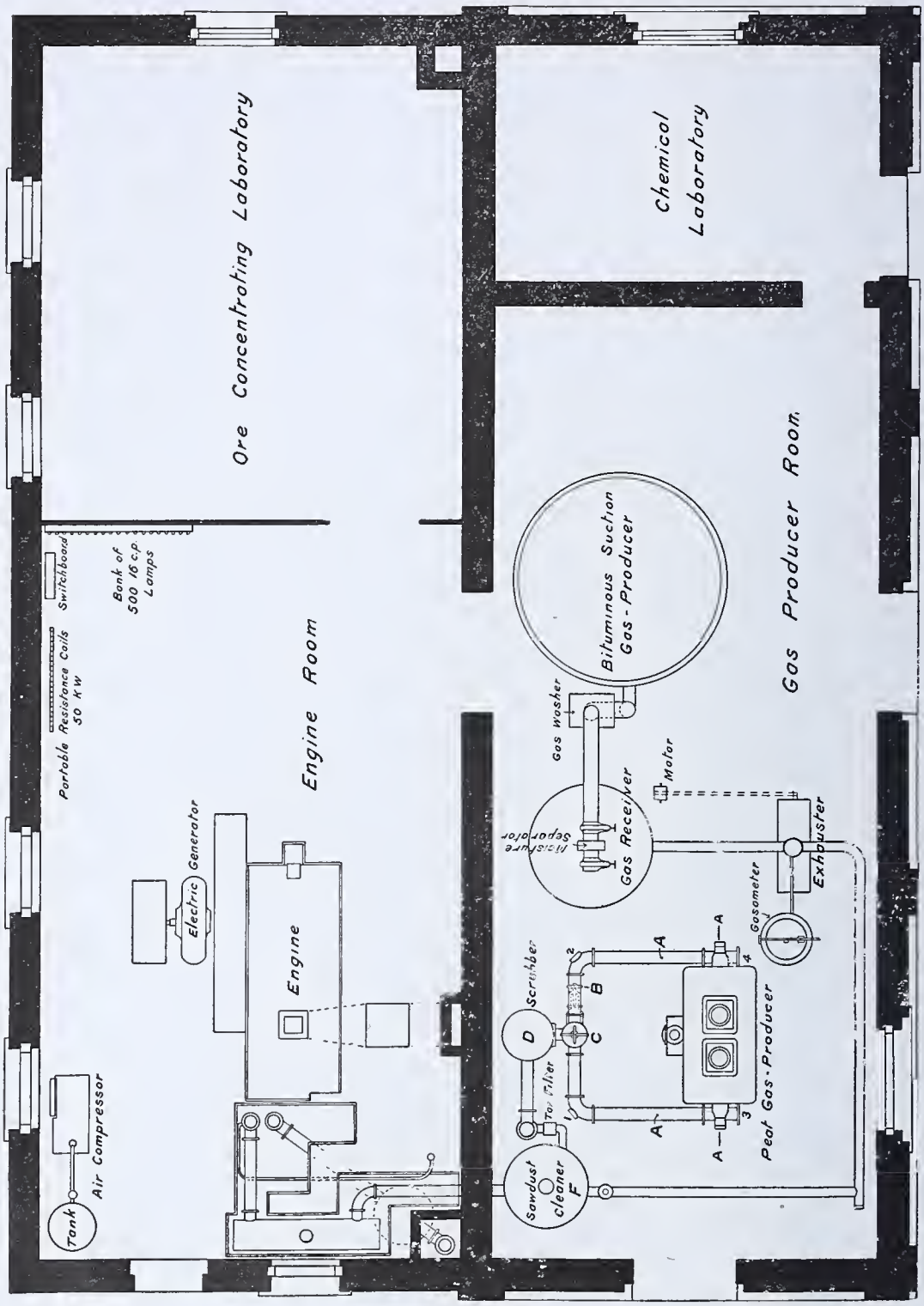

GROUND FLOOR PLAN OF FUEL TESTING STATION

GENERAL EQUIPMENT OF PLANT, AND ARRANGEMENT OF MACHINERY.

The Fuel Testing Station is equipped, at present, with a 60 H.P., double zone, Korting peat gas producer, with wet coke scrubber, tar filter, and dry scrubber; and a Westinghouse 100 H.P. bituminous, suction gas producer, complete, with exhauster, wet scrubber, gas receiver, and moisture separator, and a 60 H.P., 4 stroke cycle, single acting Korting gas engine. A small exhauster, driven by a 1 H.P. electric motor, is installed for starting the peat gas producer, and an air tank, with compressor driven by a 3 H.P. motor, supplies air under a pressure of nine atmospheres for starting the engine. A 50 K.W. direct current Westinghouse electric generator is directly connected to the engine.

For the purpose of absorbing the electrical energy generated when making a test, a 50 K.W. portable resistance, and a bank of 500 16 c.p., incandescent lamps are provided.

The electric generator is connected to a switchboard provided with a Weston ampere-meter and volt-meter, from which leads are taken to the resistance rack, to a 40 H.P. motor used for driving the concentrating machinery located in the same building, to the peat crushing motor, and to the lighting circuit.

A small crusher driven by a direct current motor is placed in the peat shed; where the peat blocks, as they arrive from the bog, are crushed to the size most suitable for the producer.

The chemical laboratory is located at one end of the producer floor, and is provided with the necessary apparatus for making complete gas analyses, fuel analyses, and determinations of the calorific value of fuels.

The calorific value of the producer gas is determined by means of a Junker's continuous calorimeter, which is placed in the engine room, close to the gas main. This calorimeter is provided with a small exhauster, driven by a 1-10 H.P. motor, which delivers gas at constant pressure to the calorimeter. The general arrangement of the machinery, testing apparatus, and chemical laboratory, is clearly shown on Fig. 1, and hence requires no further explanation.

PEAT GAS PRODUCER. (page 7)

Description.

The producer shown in Plate II consists of a rectangular steel shell, having the following outside dimensions: 2′-9″ x 5′-2″, in horizontal section, and 15′-0″ high, from floor level to top of charging hoppers. For cleaning

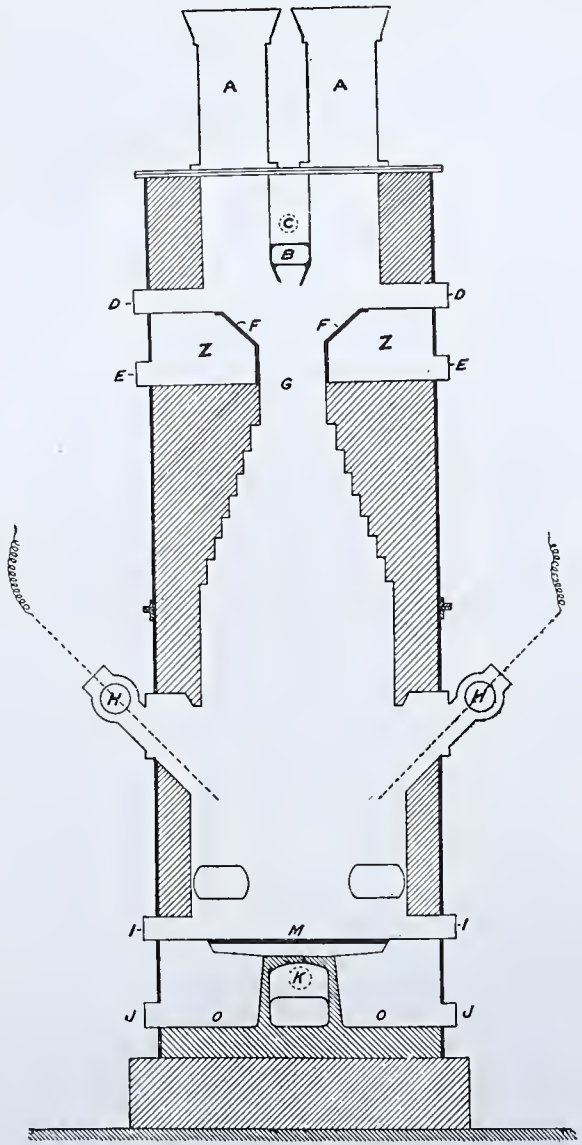

Fig. 2.—Sectional Elevation Through A-A

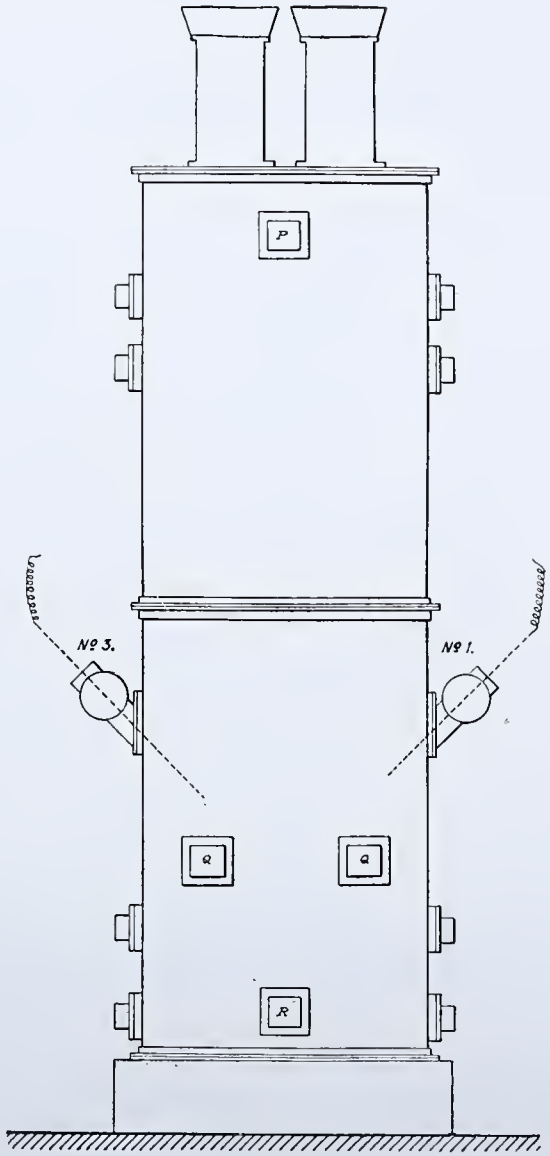

Fig. 3.—Rear Elevation

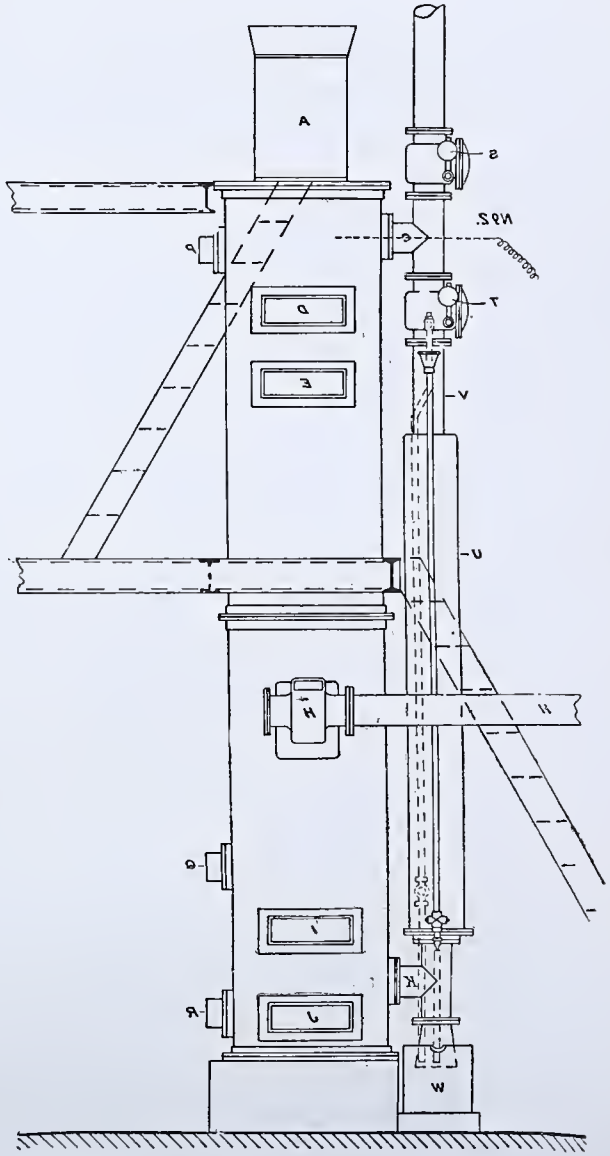

Fig. 4.—Side Elevation

KORTING PEAT GAS PRODUCER (BEFORE ALTERATION)

fires and removing ashes, 12 doors are provided: four on each side, and four on the back. These doors are shown on Plate II.

On Figs. 2, 3, and 4, the producer is shown in section, rear elevation, and side elevation, respectively.

It can be seen by Fig 2, that the producer consists of two combustion zones: **F-F** at the top and **M** at the bottom. **F-F** represents inclined grate bars; **D-D** doors for poking and cleaning the fires resting on the grates **F-F**. The ashes resulting from the combustion of the fuel on these grates drop into the chambers **Z-Z**, and are removed through the doors **E-E**. The gases evolved at this zone are drawn off through the chamber **B**. The dust and tar which are caught in this chamber are removed through door **P** on the back of the producer, as shown in Fig. 3. **A-A** represents charging hoppers.

M, on Fig. 2, represents the grate bars of the lower zone, and **I-I** the doors through which the fires of the lower zone are poked and cleaned. The fire above the grates of the lower zone is poked through the doors **Q-Q**, as shown in Figs. 3 and 4. The ashes resulting from the complete combustion of the fuel in this zone fall through the grate bars into the chambers **O-O**, and are removed through the doors **J-J**.

The products of the combustion taking place in the upper zone are drawn off through chamber **B**, through the pipe **C**, and vertical pipe **V**, shown in Fig. 4, to chamber **K**, Fig. 2; when they pass finally through the fuel of the lower zone to the two gas off-takes, **H-H** Fig 2.

S, on Fig. 4, at the top of vertical pipe **V**, is a damper which is opened to allow the gases resulting from the combustion of the peat to pass into the atmosphere—when the producer is standing idle. The damper **T**, also on Fig. 4, is closed while the producer is standing idle; but it is opened and the damper **S** closed when the producer is in operation. These two dampers are provided with cover plates, which can be readily removed when it is necessary to remove from the damper chambers any material which has collected therein. The vertical gas pipe **V**, is cooled by means of cold water continually circulating in the jacket **U**. The cooling water enters at the bottom of this jacket, and overflows at the top. **W**, is a water seal, which covers the open bottom of the vertical pipe **V**.

The ashes which fall through the grate bars **M** into the gas chamber **K**—shown in section in Fig. 2—are removed through door **R**, shown in Figs. 3 and 4.

The off-takes, **H-H**, shown in Fig. 2, are provided with caps held firmly in place by clamps; which may be removed for the purpose of inspecting the interior of the producer, at this point, or, for the purpose of removing any dust or tarry matter which may collect in the gas chambers.

Referring to Fig. 1—which shows a plan of the producer, gas piping and

cleaning systems—the two ends of the pipes connecting the producer to the cleaning system are provided with caps 1, 2, 3, and 4, respectively, which can be easily removed, when necessary, for the purpose of clearing them of any matter which may adhere to the walls of these pipes.

For the purpose of regulating the amount of air entering the producer at the top and bottom zones, two adjustable air-openings not shown in the figures—are provided on each of the doors **E-E** and **J.J.**

Cleaning System.

In order that a sufficiently cooled gas, free from tar and dust, may be delivered to the engine, the gas, after leaving the producer, passes through a cleaning system which is composed of a wet coke scrubber **D.** (Fig. 1), tar filter, and dry saw-dust scrubber **F.**

The general arrangement, and means of operating the cleaning system, will be readily understood by referring to Fig. 5: which represents an ideal section of the producer-cleaning system and engine. The producer shown in section in this figure is not of the same design as the one installed at the Fuel Testing Plant at Ottawa; but the general arrangement, and construction of the cleaning system, are practically the same as that illustrated in Fig. 5.

The gas, after leaving the producer, enters the wet coke scrubber **A**, Fig. 5, at the bottom, and passes upward through about 3 feet of closely packed coke, which is continuously sprayed with water by the sprays marked **E-E-E.** In this scrubber, the hottest gases come into contact with the warmest water at the bottom; finally passing off at the top through the coldest spray. In this manner, the greatest cooling effect with a given amount of water is obtained. In passing through the wet coke, the gas not only loses the greater part of its sensible heat, but is freed from dust, and some of the tarry matter which was carried in suspension in the gas.

From the wet coke scrubber just described, the gas passes through a tar filter placed at **C**, but not shown in this figure. This filter is composed of a number of staggered baffle plates, around which the gases pass before passing finally through four perforated metal plates. The baffle plates and perforated plates are washed by sprays of hot water. The hot water for spraying the tar filter is obtained from the return cooling water of the gas engine. This filter removes the larger portion of the tarry matter carried over from the coke scrubber. After leaving the tar filter, the gas finally passes through the dry scrubber **B.** This scrubber is filled with excelsior at the Fuel Testing Station instead of with saw-dust which is used in some plants. The "excelsior" (wood fibre) absorbs most of the moisture and some of the tarry matter which is carried in a very finely divided state past the tar filter. Before entering the engine, the gas passes through a gas receiver; where the moisture

still contained in the gas, after passing through the dry scrubber, is deposited. The water collected in this gas receiver is pumped out from time to time—preferably at the end of a week's run.

The wet coke scrubber contains about 500 lbs. of coke. This coke should be taken out and washed about once every two or three months. The excelsior in the dry scrubber should be renewed every two or three months. The condition of this excelsior can be readily ascertained at any time, when the plant is not in operation; simply by removing the cover of the dry scrubber and inspecting the contents. The frequency with which the cleaning materials require to be treated or renewed, varies with the cleanliness of the gas. If the gas passed through the system contains much tarry matter, which is not separated out before reaching the dry scrubber, the excelsior in the scrubber will soon become clogged, and cease to fulfil its function of absorbing moisture and further cleaning the gas; and will, moreover, offer a considerable resistance to the passage of the gas. The resistance met with by the gas in the different parts of the cleaning system is shown by means of suitably placed water gauges.

Principle of Operation of the Korting Peat Gas Producer.

When the producer is in the proper condition for operation, that portion between the lower grate bars **M** and the grates **F-F** (Fig. 2) of the upper zone is completely filled with peat coke: peat free from moisture and volatile matter. That portion of the producer between the upper grate level and tops of hoppers **A-A** is filled with raw peat: peat as it comes from the shed. The function of the upper zone consists in driving the moisture and volatile matter from the peat which supplies the lower zone. To prevent, as far as possible, the products of combustion in the upper zone from being drawn by the suction of the exhauster or gas engine, straight down through the producer and out through the off-takes **H-H** instead of being drawn out through **C** and then having to pass up through the incandescent fuel in the lower zone before reaching **H**, the construction of the firebrick lining is made as shown in Fig 2; a contracted neck, **G**, being made just below the upper zone. When the producer is entirely filled with peat coke to the upper zone grate level, the resistance offered to the passage of the gases evolved in this zone through the contracted neck **G** is greater than that offered to the passage of the gases through chamber **B** and pipe **C** (Fig. 2), down through pipe **V** (Fig. 4) and chamber **K** to the lower zone; and then up through the incandescent carbon to the off-takes **H-H**. This double zone construction makes it possible to feed tar, and moisture-free fuel, to the lower zone, where the bulk of the final gas is formed.

The combustion taking place at the upper zone is just sufficient to supply

the heat necessary to evaporate the moisture and drive off the volatile matter contained in the peat fed into the hoppers **A-A.**

The gaseous products, viz., water vapour, tarry vapours, carbon monoxide, carbon dioxide, and a small percentage of gaseous hydrocarbons, in the form of stable gases, resulting from the combustion taking place in the upper zone, are drawn off, as explained previously, through the chamber **B** (Fig. 2) and down through the water-cooled pipe **V** (Fig. 4) to the gas chamber **K**, located under the fires of the lower zone. Some of the moisture and tarry vapours are condensed on the water-cooled surface of pipe **V**, and drop to the bottom of the water seal **W** (Fig. 4), from which the tar can be readily removed. That portion of the water and tarry vapours which escapes condensation in passing down through the water-cooled pipe **V** is drawn up through the incandescent peat coke of the lower zone, and through the gas off-takes.

A part of the moisture which escapes condensation in the water-cooled pipe **V** is decomposed by reaction with the hot carbon, forming free hydrogen, carbon-monoxide, and carbon dioxide. Part of the carbon dioxide is reduced to carbon monoxide, and some of the tarry vapours are changed to stable gaseous, hydrocarbon compounds. The following analysis shows the composition of a sample taken from the gases evolved in the upper zone:—

CO_2	15·3	per cent.	by volume.
CO	7·2	"	"
O_2	3·2	"	"
C_2H_4	0·7	"	"

the residue being chiefly nitrogen. The gases also contain water and hydrocarbon vapours, which condense in the sample bottle before analysis.

In order to ensure the best operation of this producer, care must be exercised to ascertain the most suitable size to which the peat fed into the hoppers should be crushed; since the peat in passing through the producer, remains only a comparatively short time in the upper combustion zone; and the process of coking must be completed in this interval. If the peat is too wet or is not crushed small enough, the peat passing through the contracted neck **G** to the lower zone will be only partially coked, and in some cases only the moisture will be evaporated. The greater the moisture content the smaller should be the pieces of peat fed into the producer.

When peat only partially coked finds its way into the lower combustion zone, it is impossible to obtain a gas sufficiently free from tar for use in the gas engine.

Utilization of the Heat of the Exhaust Gases. (page 25)

It was previously mentioned that only 30 per cent of the heating value of the gas delivered to the engine was converted into useful work in the

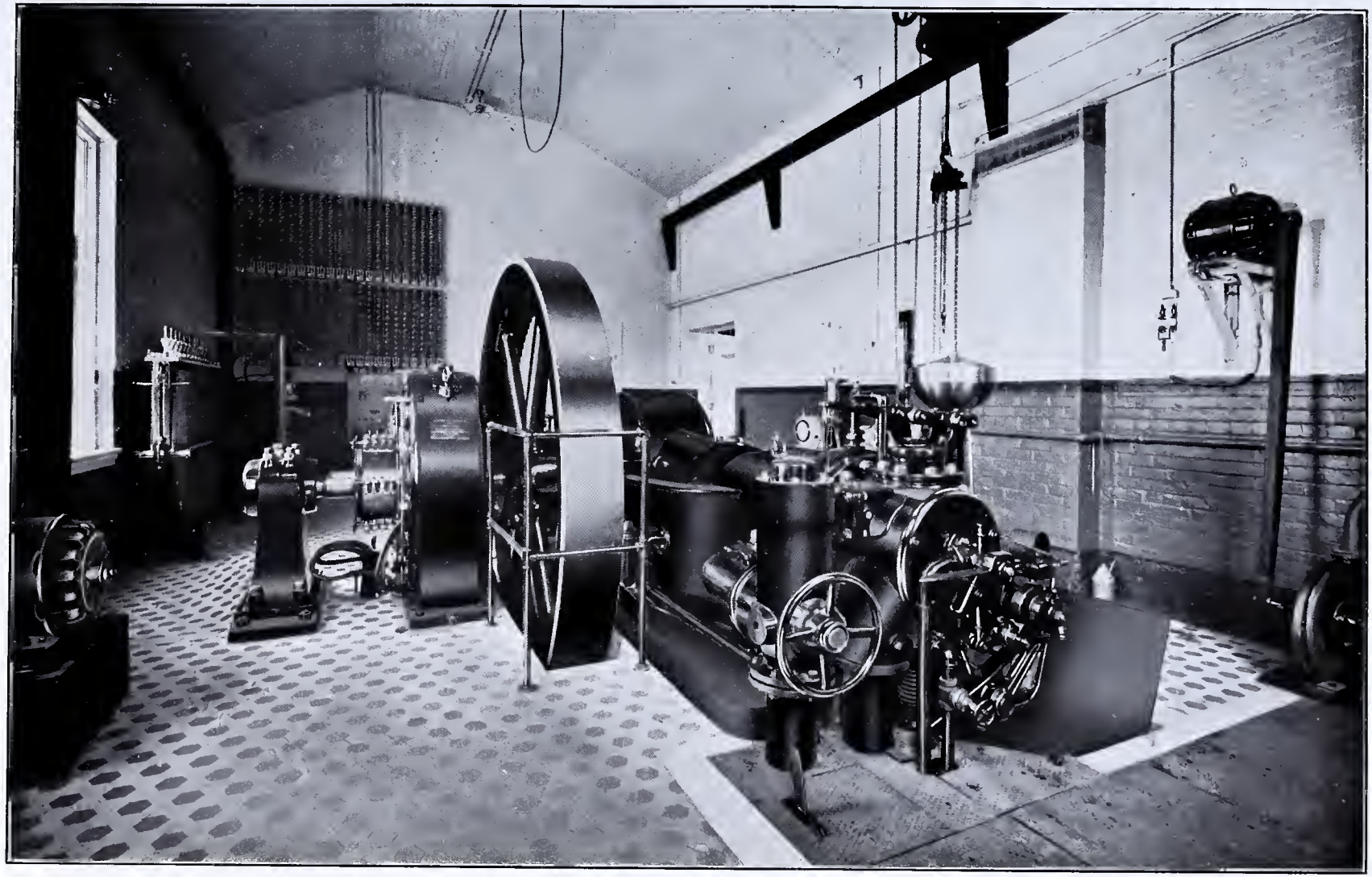

GENERAL VIEW OF KÖRTING GAS ENGINE, AND INTERIOR OF ENGINE ROOM

cylinder; the other 70 per cent. passing off in the exhaust gases and cylinder jacket cooling water. This latter amount of heat is approximately equal to 6,000 B. T. units, or half a pound of coal containing 12,000 B. T. units per pound, per B. H. P. hour. This heat loss is so considerable that, many attempts have been made by experimenters to recover at least a part of it by utilizing the heat of the exhaust gases and cylinder cooling water for power or other purposes. If this heat could be even partially converted into useful work, the efficiency of the gas engine would be appreciably increased.

The possibility of utilizing the heat of the exhaust gas for steam raising in specially designed steam generators has been investigated, and results have been attained which demonstrate that such a utilization of the heat of the exhaust gases is practically feasible.

In connection with large gas engine installations, low pressure steam has been generated in this manner and utilized in low pressure steam turbines. The steam thus generated, or the water heated, might also be utilized for heating buildings or for drying purposes, etc.

If we assume, for example, that 3,000 to 3,600 B. T. U. per hour per B. H. P. developed by an engine is available, and can be utilized in the production of steam, an output not exceeding 2.2 lbs. of steam per hour, at a pressure of 70 to 85 lbs. per square inch per B. H. P. developed, could probably be obtained. But, in order to recover this waste heat, the engine must work at least at about two-thirds of its maximum power; if not, the exhaust gas is expanded down so much by the modern methods of governing that it is not hot enough to give up any appreciable quantity of heat for recovery in this manner.

By way of illustration, we will consider the case of a 100 B. H. P. gas engine working at full load. The amount of heat available per hour will be approximately 350,000 B. T. units; and since 3,500 B. T. units will generate 2.2 lbs. of steam at a pressure of 70 to 85 lbs. per square inch, the total amount of steam generated from the utilization of the 350,000 B. T. units will be 220 lbs. If this were utilized in a non-condensing steam engine, the power developed would be about 6 H. P., or 6 per cent. of the power of the gas engine. This is not inconsiderable, and will become a very appreciable factor in large gas engine installations.

PART II. (page 63)

RESULTS OF TRIALS WITH PRODUCER: AS ALTERED BY THE KORTING BROTHERS, HANOVER, GERMANY.

Introduction.

The trials described in part I, demonstrated that, with the producer and cleaning system as originally designed and constructed, it was impossible to obtain a gas sufficiently free from tar to permit the engine to operate many hours without cleaning the cylinder and valves. It was also shown that the operation of cleaning could be performed while the engine was in motion, without in any way interfering with the load; but while the plant could be run for an indefinite period without having to shut down for purposes of cleaning, efforts were made to discover the seat of the trouble, and, if possible, to correct it.

The results of the many trials conducted by the writer and his technical staff, tended to point to a faulty construction of the producer itself; and on the strength of the deductions made from the observations, certain changes in the internal construction of the producer were recommended to Korting Brothers, Hanover, Germany—the manufacturers of the plant.

With a view to assisting them in their efforts to eliminate the tendency to the formation of tar in large quantities, the Mines Branch sent to their works at Hanover, Germany, ten tons of the peat manufactured at the Government peat plant at Alfred. After a lengthy investigation of the behaviour of this peat under varying conditions in a similar producer erected in their shops, they reported as having succeeded in obtaining a gas free from tar, and on which the engine could operate for many months without cleaning.

To accomplish this result, the engineer-in-charge—acting upon the results of our investigation—deemed it advisable to alter the shape of the lining of the producer; because the contracted neck described in the foregoing pages did not offer sufficient resistance to the passage of the gas down through this neck to the off-takes, hence, instead of operating as an up-draft producer, in the upper zone, it acted partially as down-draft.

In order to overcome this difficulty, the contracted neck was made much longer, thus increasing, considerably, the resistance to the passage of the gas through this channel.

The cleaning system was also altered, as will be described later.

But even with these alterations, the producer, though undoubtedly improved, failed to deliver a gas sufficiently free from tar to permit of more than a few hours' operation of the engine before it became necessary to clean the valves and cylinder to prevent sticking; and the old remedy of washing with oil-soap and water had to be resorted to.

The trials made by the producer expert sent by the Korting Brothers from Germany did not prove satisfactory, as regards the generation of a tar-free gas, consequently, a series of tests were conducted by the technical staff of the Fuel Testing Division for the purpose of ascertaining the cause of the trouble, and, if possible, discovering some means of correcting it.

During these trials the producer was operated under varying conditions, as regards air openings in the upper and lower zones; the objective being, to ascertain the particular air openings with which the producer delivered the cleanest gas, and, if possible, to balance the two zones. After many trials, the idea of appreciably decreasing the tendency to the formation of tar, by this means, was abandoned; since, even with a large range of air-openings, the composition of the gas was only slightly altered, and the quantity of tar carried past the cleaning system did not vary to any appreciable extent.

As a result of many trials made with the producer in its original and altered state, it was concluded that the tarry components of the gas evolved in the upper zone could not be entirely burned or split-up into permanent combustible gases; and for this reason, a special method of cleaning the gas was resorted to in order to overcome the difficulty.

After considerable experimentation, the writer succeeded in devising a cleaning system which effectively separated the troublesome tarry matter from the gas; so that irrespective of the behaviour of the producer itself, namely, whether it operated as down-draft or up-draft, with large or small air-openings, the gas at all times was sufficiently clean to offer no obstruction to the normal operation of the gas engine.

While, under the original construction, it was necessary to remove and clean the mixing or admission valves after a few hours' run—and even the piston, after a few days—it is now possible—under the new conditions—to run for many days before it becomes necessary to clean either the mixing or admission valves, and the piston should not require cleaning more than once or twice a year, if the plant is operated continuously. This system of cleaning will be described later.

(Alterations to be seen from drawings.)

DESCRIPTION OF TAR SEPARATOR DEVISED BY B. F. HAANEL.

(page 69)

The system invented by the writer, for the separation of tar and tar fog from producer gas, is shown in sectional elevation, Fig. 13.

The lower part of the coke scrubber has not been altered. The cylinder, **K-K**, Fig 12, and perforated plate **J**, have been removed, and in their place has been substituted the wire mesh cone, **A**, Fig. 13. At **C**, an overflow has been provided for the purpose of carrying away the solid matter separated from the gas on the outside of the cone and washed off by the spray **G**.

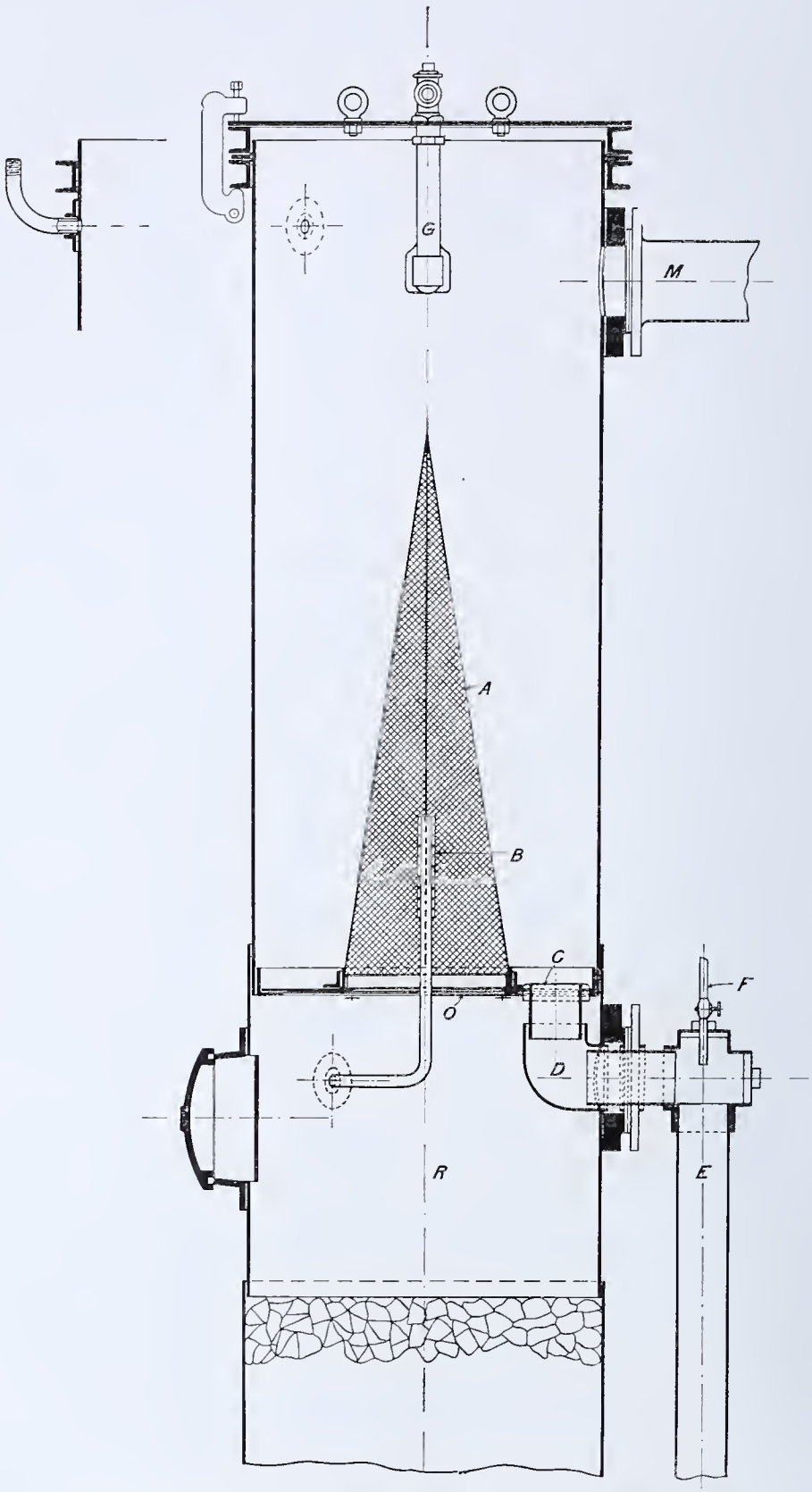

TAR SEPARATOR DEVISED BY B. F. HAANEL

A water spray, **B**, serves the combined function of washing the interior surface of the cone and cooling the gas. At **F**, a water jet has been provided for sluicing the overflow pipe **E**, whenever this shows a tendency to clog. This, however, it has never been necessary to use, the overflow pipe remaining absolutely clean.

The water spray, **G**, which in the old system was supplied with cold water only, is now connected by a two-way cock to the return cooling water from the gas engine. Whenever the suction in the chamber containing the wire mesh cone begins to rise, the cold water at **G** is shut off and the hot water turned on. By this means the suction, whatever it may be, is brought to normal in about a minute. The cone is made of 40 mesh brass wire screen.

DESCRIPTION OF OPERATION.

The gas passes through the wet coke into chamber **R** as before. From this chamber the expanded and cooled gas is drawn through the opening **O**, through the cone screen, and passes out at **M**.

In passing through the cone screen, some of the particles of the tar-fog still carried by the gas, impinge against the metallic surface of the cone, aggregate into comparatively large drops, and are then washed off by the continuous spray **B**—dropping into chamber **R**, through the wet coke, down to the water seal. The particles escaping contact with the metallic surface of the cone, in passing through the fine meshes are crowded together, and are thus caused to coalesce, forming larger drops which either adhere to the outside surface of the cone or drop to the bottom, when the continuous cold water spray **G** washes this tarry matter to the overflow at **C**.

It will thus be seen that the action of the cone screen in eliminating the tar fog is twofold: (1) in producing coalesence of the fog particles by impact with the solid parts of the screen; (2) causing coalesence of the fog particles, by crowding together the stream lines as the gas passes through the fine meshes of the screen, and retarding the particles by friction with the internal surface of the meshes.

When the suction shows a tendency to increase, the cold water at **G** is turned off and the hot water turned on; which thoroughly cleanses the cone in a very short time, at an expenditure of a very small amount of water.

An automatic arrangement is being devised whereby an increase in suction will instantly turn off the cold, and put on the hot water, and *vice-versa*. By this device, the consumption of both hot and cold water can be reduced to a minimum.

In ordinary practice, however, it has not been found necessary to resort to the hot water spray more than two or three times during a ten hours' run. In order to maintain a straight and normal suction curve during the entire

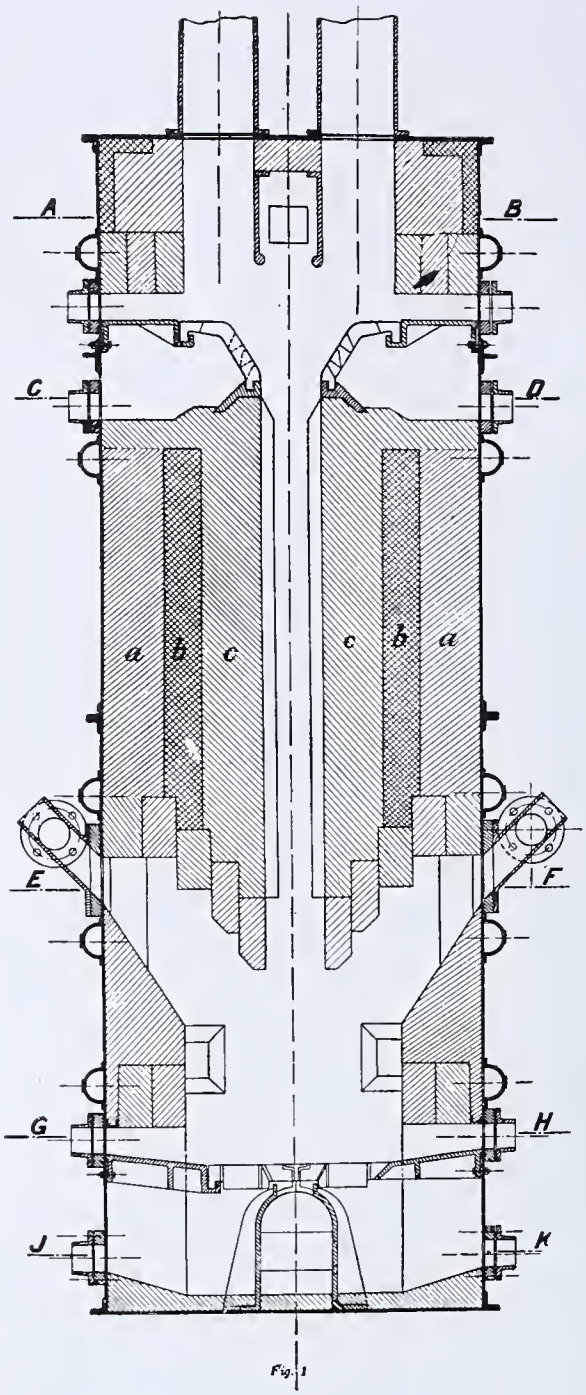

SECTIONAL ELEVATION OF KORTING PEAT GAS PRODUCER
(AFTER ALTERATION)

period of operation, a simple automatic arrangement for changing from cold to hot water and *vice-versa* would be an advantage. But while this would prove an advantage, it is in no sense a necessity.

The water consumption for cleaning with this new system is not increased over that of the old: which was very small.

The gas, after leaving this cleaning system, is sufficiently free from deleterious material, so that it can be used in the gas engine without any trouble whatever. Moreover, the cleanliness of the gas is not dependent on the perfect operation of the producer itself, but permits of a large variation in the conditions governing its operation. For example, the cleanliness of the gas—its freedom from tarry matter, as it leaves the producer—depends (1) on the moisture content of the peat burned; (2) to some extent on its quality, and (3) quite considerably on the amount of air admitted to the two zones. Close and careful regulation is, therefore, not so essential to the cleanliness of the gas leaving the cleaning system as it was with the former construction, although obviously an advantage in so far as the waste of tarry matter is reduced.

GENERAL DEDUCTIONS AND CONCLUSIONS. (page 85)

The tests carried out and described in the foregoing pages are divided into two parts:—

Part I.

Part I describes the tests carried out with the producer as originally constructed. This series of tests showed a good fuel economy, but left something to be desired as regards the cleanliness of the gas delivered to the engine. The deposition of tar in the gas main, and on the valves, cylinder, and piston of the engine, necessitated the cleaning of the parts affected. At the close of the run it was generally found necessary to remove the valves for cleaning, and to wash the cylinder and piston from time to time during the running of the engine. The operation of cleaning was accomplished by syringing the cylinder and piston with a mixture of oil-soap and water; and while the continuity of the running of the engine was at no time endangered by the presence of tar, the operation of cleaning occupied more of the engineer's time than was considered desirable.

In order to obviate this trouble, such as it was, the makers at their own expense had the producer reconstructed.

Part II.

Part II of the report deals with the tests carried out with the producer as reconstructed by the makers, and with the modification introduced by the technical staff of the Fuel Testing Station.

Upon scrutinizing the first of this series of tests it will be perceived that tar still reached the engine—in spite of the change in construction; and although a manifest improvement was discerned, it was found necessary from time to time to wash the cylinder and piston as in the previous series of tests.

Further tests were conducted in order to observe the effect which changes in the distribution of the air admitted to the upper and lower combustion zones would have upon the production of tar. The results of these tests led, on the one hand, to the abandonment of the idea of totally destroying all the tarry matter within the producer itself, and on the other hand, to the necessity of separating the tar from the gas in the cleaning system.

After some preliminary experimentation, a solution of the problem was found by placing a gauze cone in the top chamber of the coke scrubber. After the inclusion of this cone in the cleaning system no further trouble with tar was experienced, *and the operation of the plant, as it now stands, may be pronounced as entirely satisfactory.*

The results of the investigation may be summarized as follows:—

Reliability.

The peat producer-gas power plant, as now constructed, may be pronounced thoroughly reliable. Its operation may be carried on continuously for a week or more without having to shut down for the purpose of cleaning the valves of the engine. The engine has been operated for a period of 150 hours without removing either the admission or mixing valves for cleaning.

It should not be found necessary in commercial practice, to remove the piston for the purpose of cleaning, more than once in six months.

The operation of the producer is uniform, and the gas delivered to the engine varies only slightly during a ten hours' run. The removal of ashes, and the cleaning of the fires, can be done without interfering with the operation of the engine; due to a change in the quality of the gas.

Attendance.

A peat-producer-gas-power-plant of the size installed in the Fuel Testing Station can safely be left in the hands of an intelligent labourer after he has received, for a week or so, instructions in the handling of the plant, from a competent engineer. The services of only one man are required to run this plant when it is operated on day shift work only.

Cleaning of Gas Pipes, Mains, Valves, etc.

It is recommended that the gas pipes leading from the producer to the cleaning system and the tar filter be cleaned once a week, if possible, when the plant is run ten hours a day during the working days of the year. If this

is done, very little will be required to keep the plant in good condition. The admission and mixing valves of the engine will not require cleaning for two weeks or more.

Fuel Consumption.

The consumption of fuel per brake horse-power hour—including stand-by losses—is for *full load, 1·7 lbs. of dry peat, or 2·3 lbs. of peat containing 25 per cent. moisture; for 3-4 load,* the fuel consumption—including stand-by losses—is *2·1 lbs. of dry peat or 2·8 lbs. of peat containing 25 per cent. moisture.*

Cost of Fuel.

In estimating fuel costs, the assumption is made that peat with a moisture content of 25 per cent. can be delivered to the producer for $2 per ton. In order, however, to take advantage of this, or a lower cost for fuel, the power plant will have to be situated at or near the bog where the peat fuel is manufactured. For small plants of the type and capacity described in the foregoing pages this might not prove feasible in many cases; but will prove entirely feasible and practicable when the plants are of large capacity and when the energy developed is transmitted, in the form of electricity, to neighbouring towns and villages, for lighting, power, and other purposes.

Since the fuel burned in the producer does not require to be of the best quality, the fuel cost may be considerably reduced, since the broken peat bricks and considerable fines—which always occur in the manufacture of peat and otherwise represent a loss—can be efficiently utilized in the producer. Assuming, however, that peat can be delivered to the plant for $2 per ton, and that the plant is run with a power factor of 75 per cent. for 3,000 hours, the fuel costs would be $8.40 per B.H.P. year, including stand-by losses.

Plant Costs.

The first cost of a plant of this type, in comparison with that of other types, should be left for the consideration of those interested in particular cases, by obtaining competitive prices from manufacturers. Local conditions, capacity of plant, etc., changes the first cost so considerably that any figures quoted here might prove misleading.

By-Product Recovery Plants.

In various plants at present utilizing peat for the production of power, the net cost of developing power is considerably reduced by the sale of sulphate of ammonia and tar; which are recovered as by-products. This recovery is attempted only in plants of larger size than the one described in the foregoing pages.

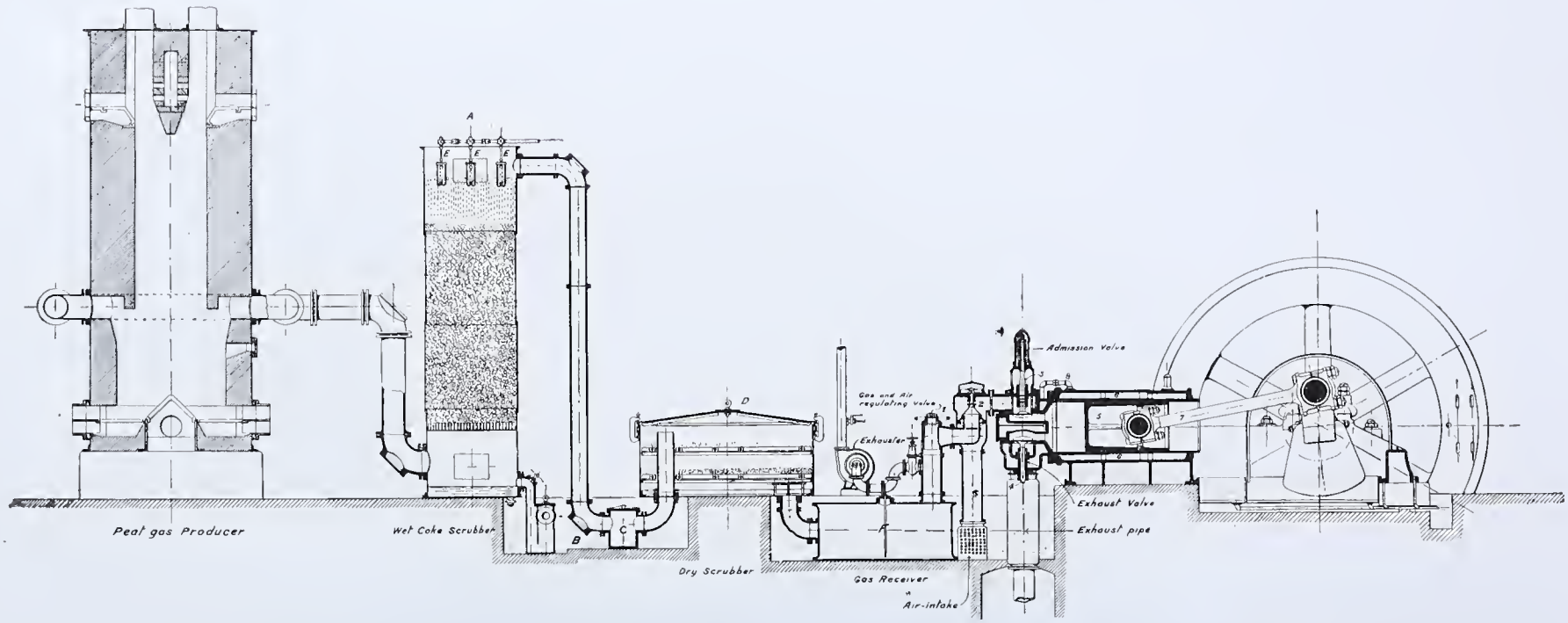

IDEAL SECTION OF KÖRTING PEAT PRODUCER-GAS PLANT

Table XIV. (Page 59.)

SUMMARY OF THE RESULTS OF TESTS NOS. 5, 6, 7, AND 8.

Loads carried on engine	¼	½	¾	Full
Fires cleaned, ashes removed, and hoppers filled	8.00 a.m.	8.00 a.m.	8.30 a.m.	6.00 a.m.
Test started	8.00 a.m.	8.00 a.m.	8.30 a.m.	6.00 a.m.
" terminated	6.00 p.m.	6.00 p.m.	6.30 p.m.	4.00 p.m.
Duration of test, hours	10	10	10	10
Average volts	107.4	111.6	115.7	123.3
" amperes	98.5	192.6	304.1	320.2
" Watts at switchboard	10600	21510	35180	39490
" H.P. at switchboard	14.2	28.8	47.1	52.9
" B.H.P. developed at engine	16.1	32.7	53.6	60.1
" moisture content of fuel, p.c.	37.5	31.8	33.3	35.0
Ash in dry fuel, p.c.	6.0	6.6	6.4	6.1
Calorific value of dry fuel, B.T. units per lb.	9460	9460	9440	9500
Total fuel fired, lbs.	965	1060	1580	1555
Average fuel consumption per hour, lbs	96.5	106	158	155.5
" " " B.H.P. hour as fired, lbs.	6.14	3.25	2.95	2.59
" " " B.H.P. hour as calculated to 25 p.c. moisture, lbs.	5.12	2.95	2.62	2.24
" " " B.H.P. hour as calculated dry lbs.	3.84	2.22	1.97	1.68
Water consumption, gals. per B.H.P. hour, producer	16.6	10.31	5.9	4.98
Water consumption, gals. per B.H.P., engine	5.4	2.60	2.1	2.08
Speed of engine, revs. per minute	20.1	2.00	1.98	1.98

(Table XIV shows results of tests made before alteration, and the following tables XV and XVI, results after alteration of the gas producer.)

Table XV. (page 87)

TRIALS WITH ALFRED PEAT, AIR OPENING FOR FULL LOAD ON GAUGE.

1. No. of trial	20	21	
2. Date of trial	Sept. 19	Sept. 20 and 21	1911
3. Time of starting	11.30 a.m.	10.10 a.m.	
4. Time of stopping	9.30 p.m.	6.10 a.m.	
5. Duration	10	20	hrs.
6. Total peat charged during trial	1250	2450	lbs.
7. Total ash and clinker drawn during trial	60	116	"
8. Total peat used for banking and starting		431	"
9. Total peat used during trial and for banking and starting		2881	"
Particulars of Peat Used.			
10. Moisture p.c. in peat as charged	31.4	30.2	
Proximate analysis of dried peat as charged.			
11. Fixed carbon	29.5	30.0	per cent.
12. Volatile matter	64.8	64.6	"
13. Ash	5.7	5.4	"
14. Calorific value of dry peat	9470	9450	B.T.U. per lb.
15. Calorific value of peat as charged	6500	6600	
16. Combustible matter in refuse withdrawn during trial	53.4	29.7	per cent.
17. Barometer reading	29.85	29.88	inches
18. Wet bulb (in producer room)		59.2	°F
19. Dry bulb (in producer room)		67.1	°F
20. Humidity (in producer room)		64.8	per cent.
21. Average suction at producer exit	0.6	0.5	inches of water
22. " " after coke scrubber	4.3	2.6	
23. " " " tar filter	4.7	4.7	
24. " " " dry scrubber	5.7	5.4	
25. Temperature of gas leaving producer in No. 1 exit	469	475	°F
Engine and Generator.			
26. Average revolutions per minute of engine	190	190	
27. Temperature of outlet cooling water	111	115	°F
28. Average kilowatts delivered to switchboard	35.3	35.2	
29. Average electrical horse-power	47.3	47.2	
30. Efficiency of dynamo	0.88	0.88	
31. Average brake horse-power of engine	53.8	53.7	

Table XV—*Concluded.*

TRIALS WITH ALFRED PEAT, AIR OPENING FOR FULL LOAD ON GAUGE—Concluded.

	Gas Analysis, per cent. by volume Sample taken after passing tar filter.	10 samples	20 samples	
32.	Carbon dioxide	10.8	9.9	per cent.
33.	Ethylene	0.5	0.4	"
34.	Oxygen	0.5	0.3	"
35.	Carbon monoxide	17.7	20.2	"
36.	Methane	2.4	2.4	"
37.	Hydrogen	10.2	10.3	"
38.	Nitrogen	57.9	56.5	"
39.	Inflammable gas	30.8	33.3	"
40.	Calorific value from analysis (gross)	122	128	B.T.U. per cub. ft.
41.	Calorific value from analysis (net)	113	120	
42.	Average net calorific value from recording gas calorimeter	123	127	
	RESULTS OF TESTS.			
43.	Total peat charged during trial	1250	2450	lbs.
44.	Total dry peat charged during trial	858	1710	"
45.	Total ash and clinker drawn during trial	60	116	"
46.	Ash and clinker drawn per cent. of peat charged	4.8	4.7	
47.	Ash and clinker drawn per cent. of dry peat charged	7.0	6.8	
48.	Average kilowatts delivered to switchboard	35.3	35.2	
49.	Average brake horse-power of engine	53.8	53.7	
	Hourly Quantities.			
50.	Lbs. of peat charged	125	122	
51.	Lbs. of dry peat charged	86	86	
	Economic Results.			
52.	Peat charged per K. W. hour	3.54	3.47	lbs.
53.	Dry peat charged per K. W. hour	2.44	2.44	"
54.	Peat charged per B.H.P. hour	2.32	2.27	"
55.	Dry peat charged per B.H.P. hour	1.6	1.6	"
56.	Overall thermal efficiency of engine and producer	16.8	16.9	per cent.
	Results Deducted from Fuel and Gas Analyses.			
57.	Air supplied to producer per lb. of dried peat charged	39.2	37.6	cub. ft.
58.	Water supplied to producer per lb. of dried peat charged	0.47	0.46	lbs.
59.	Cubic feet of gas produced per lb. of dried peat charged	53.4	52.6	
60.	Heat equivalent of gas produced per lb. of dried peat charged	6040	6310	B.T.U.
61.	Producer efficiency	63.8	66.8	per cent.
62.	Cubic feet of gas delivered to engine per hour	4590	4520	
63.	Cubic feet of gas delivered per B.H.P. per hour	85	84	
64.	Heat equivalent of gas delivered per B.H.P. per hour	9660	10100	B.T.U.
65.	Thermal efficiency of engine (B. H. P. basis)	26.3	25.2	per cent.

Table XVI.

TRIAL WITH FARNHAM PEAT; AIR OPENING FOR ¾ LOAD ON GAUGE.

1. No. of trial	24	
2. Date of trial	Oct. 5	1911
3. Time of starting	9.30 a.m.	
4. Time of stopping	7.30 p.m.	
5. Duration	10-00	hrs.
6. Total peat charged during trial	1,102	lbs.
7. Total ash and clinker drawn during trial	125	"
8. Total peat used for banking and starting	155	"
9. Total peat charged, including that used for banking and starting	1,257	"
Particulars of Peat Used.		
10. Moisture per cent. in peat as charged	27.8	
Proximate analysis of dried peat as charged.		
11. Fixed carbon	29.9	per cent.
12. Volatile matter	65.1	"
13. Ash	5.0	"
14. Calorific value of dry peat	9730	B.T.U.
15. Calorific value of peat as charged	7020	per lb.
16. Combustible matter in refuse	43.1	per cent.
17. Barometer reading	30.00	inches
18. Wet bulb thermometer	51	°F
19. Dry bulb thermometer	62	"
20. Humidity	46	per cent.
21. Average suction at producer exit	0.4	in. of water
22. " " after coke scrubber	2.8	
23. " " " tar filter	5.5	
24. " " " dry scrubber	6.2	
25. Average temperature of gas at producer exit No. 1	621	°F
26. Initial reading of water meter for producer and scrubber	3792	cub. ft.
27. Final reading of water meter for producer and scrubber	4482	"
28. Difference	690	"
29. Time between readings	10	hrs.
Engine and Generator.		
30. Average revolutions per minute	194	
31. Average temperature of outlet cooling water	113	°F
32. " indicated horse-power (gross)	52.2	
33. Average kilowatts delivered to switchboard	27.1	
34. " electrical horse-power	36.3	
35. Efficiency of dynamo	0.88	
36. Average brake horse-power of engine	41.3	
37. Mechanical efficiency	79.0	per cent.
38. Initial reading of water meter for engine	8964	cub. ft.
39. Final reading of water meter for engine	9312	"
40. Difference	348	"
41. Time between readings	10	hrs.

Table XVI—*Concluded.*

TRIAL WITH FARNHAM PEAT; AIR OPENING FOR ¾ LOAD ON GAUGE—Concluded.

	Gas Analysis per cent. By volume, sample taken after passing tar filter, average of 10 samples.		
42.	Carbon dioxide	8.5	per cent.
43.	Ethylene	0.4	"
44.	Oxygen	0.3	"
45.	Carbon monoxide	22.4	"
46.	Methane	2.1	"
47.	Hydrogen	10.0	"
48.	Nitrogen	56.3	"
49.	Inflammable gas	34.9	"
50.	Calorific value from analysis (gross)	132	B.T.U. per cub. ft.
51.	Calorific value from analysis (net)	124	
52.	Net calorific value from recording gas calorimeter	129	
	RESULT OF TESTS.		
53.	Total peat charged during trial	1102	lbs.
54.	Total dry peat charged during trial	794	"
55.	Total ash and clinker drawn during trial	125	"
56.	Ash and clinker drawn per cent. of peat charged	11.3	
57.	Ash and clinker drawn per cent. of dry peat charged	15.7	
58.	Average kilowatts delivered to switchboard	27.1	
59.	Average brake horse-power of engine	41.3	
	Hourly quantities—		
60.	Lbs. of peat charged	110	
61.	" " dry peat charged	79	
62.	Cub. ft. of water to producer and scrubbers	69.0	
63.	" " " engine	34.8	
64.	Gallons of water to producer and scrubbers	430	
65.	" " " engine	216	
66.	Peat charged per K.W. hour	4.06	lbs.
67.	Dry peat charged per K.W. hour	2.91	"
68.	Peat charged per B.H.P. hour	2.66	lbs.
69.	Dry peat charged per B.H.P. hour	1.91	"
70.	Overall thermal efficiency of engine and producer	13.7	per cent.
71.	Gallons of water used per B.H.P hour, by producers and scrubbers	10.4	
72.	By engine	5.23	
	Results Deduced from Fuel and Gas Analysis.		
73.	Air supplied to producer per lb. of dried peat charged	34.8	cub. ft.
74.	Water supplied to producer per lb. of dried peat charged	0.40	lbs.
75.	Cubic feet of gas produced per lb. of dried peat charged	48.6	
76.	Heat equivalent of gas produced per lb. of dried peat charged	6030	B.T.U.
77.	Producer efficiency	62.0	per cent.
78.	Cubic feet of gas delivered to engine per hour	3840	
79.	Cubic feet of gas delivered per B.H.P. per hour	93	
80.	Cubic feet of gas delivered per I.H.P. per hour	74	
81.	Heat equivalent of gas delivered per B.H.P. per hour	11500	B.T.U.
82.	Thermal efficiency of engine (B.H.P. basis)	22.1	per cent.
83.	Heat equivalent of gas delivered I. H. P. per hour	9160	B.T.U.
84.	Thermal efficiency of engine (I.H.P. basis)	27.9	per cent.

COMMERCIAL UTILISATION OF PEAT FOR POWER PURPOSES.*

By Mr. H. V. Pegg.

The question of the utilisation of peat fuel for power purposes has received a large amount of attention from engineers for many years past. Efforts in this direction have mostly taken the shape of some form of preparation of peat fuel in order primarily to get rid of the superabundant moisture in the fuel. Very large sums of money have been spent on peat-preparing machinery with generally very inadequate results; hence it has always appeared to the author that, in order to bring the utilisation of peat to a commercial level, the first consideration would be the utilisation of the peat as far as possible in the condition in which it leaves the boglands without any preliminary and expensive machine treatment.

The author had the opportunity, about seven years ago, of experimenting with air-dried, hand-cut peat fired into a special form of gas-producer. With all gas-producers using bituminous fuel, the main trouble is to get rid of the tarry by-product. In this instance the gas-producer was arranged to work intermittently, there being periods of "blowing" during which the fuel in the producer was urged to incandescence, and periods of gasmaking during which the tarry by-products were passed through the incandescent fuel, where they were split up into gas. The chief difficulty experienced with this plant was the high thermal value of the gas generated, about 330 B.T.U. Owing to the high and varying percentage of hydrogen in the gas, it proved unsuitable for use in the works gas engine; and although the plant was running more or less continuously for ten days driving the whole works, very considerable trouble was experienced, not only in the engine, but also in the plant, owing to the varying moisture content of the peat, the producer plant being decidedly sensitive in regard to this latter point.

From the experience then gained it appeared evident that it would be wiser to extract the tar from the gas rather than to try to utilise the same by converting it into gas, and, further, that the producer must be comparatively non-sensitive to the amount of moisture in the peat fuel. Some two years ago the author discussed the question of the utilisation of air-dried peat fuel with Mr. Hamilton Robb, of Portadown, who, having large supplies of such fuel convenient to his factory at Portadown, was strongly of opinion that it should be possible to utilise such fuel in order to generate the power required in the factory. As the result of various tests run with an experimental plant at

*A paper read at the Belfast meeting of the Institution of Mechanical Engineers, July, 1912, by Mr. H. V. Pegg. (From "The Colliery Guardian," Aug. 9th, 1912).

the works of Messrs. Crossley Brothers, Openshaw, a special plant was eventually manufactured by them under their designs and patents and to the author's specification. This plant, which has been running since last September, has been so often dealt with in the daily and technical Press that there is no need for the author to dwell upon the details of the plant, but he proposes to make a few remarks in regard to the difficulties experienced.

Air-dried peat is not a very convenient fuel to fire into the producer, and as it was uncertain whether it would be possible to burn the fuel direct in the form in which it came from the boglands, provision was originally made in the plant to deal with peat fuel prepared by being reduced in size to blocks of about 5 in. cube, but it was found possible to dispense with the preliminary treatment, and the construction of the plant was thereby considerably simplified.

As regards the general running of the plant, last October it was subjected to a test run of six hours' duration with a load of 250 b.h.p., the peat consumption per b.h.p.-hour averaging 2.55 lb., the peat fuel containing 18.98 per cent. of water; this was with both producers running, although the load was considerably below the total capacity of the plant. When necessary it has been found that the above load can be safely carried with either producer working singly, and the plant has run under these conditions for several days.

It will be noted that the percentage of moisture in the fuel during the above test was unusually low. This was owing to the unusually dry summer of 1911. During November, and especially December last, the fuel fed to the plant was extremely wet, as the rainfall in those months was very heavy, and the fuel supply was and is entirely exposed to the weather. The plant, however, worked just as well with sodden peat as it did with the drier peat, the only difference being the amount of fuel consumed. The amount of water in this "sodden peat" varied considerably from day to day, and the exact percentage was not arrived at; as near as could be estimated it was at least 70 per cent.

The separation of the tar from the gas was the chief difficulty to be overcome; it was found far better to rely on an ample water-spray through which the gas passed rather than any form of a coke-scrubber, as the coke rapidly became clogged with tar. The main portion of the tar was thrown out into a tar sump by a centrifugal tar extractor; but unless the gases were subjected to a thorough washing and cooling by the water-spray above referred to, it was found that a certain proportion of tar got past the extractor, collected in the gas mains and finally found its way into the gas engines. It was a matter of experiment as to the precise amount of water sprayed into the cooler which was necessary in order to insure that the tar vapour should be sufficiently condensed before reaching the centrifugal extractor, so as to enable the extractor

to effect the needful separation. As now arranged, the proportion of tar in the gas after passing the extractor is small, and the engine valves do not want cleaning out more than once a week.

When first started, the plant generally, and especially the producers, required a thorough cleaning once a week; at the present date the plant can be run, if necessary, for three weeks without cleaning, though the weekly cleaning generally takes place as a matter of policy. This result has been obtained owing to the increased amount of washing water used, which now amounts to about 7 gallons per b.h.p. per hour. The proportion of tar recovered is about 5 per cent. of the weight of fuel consumed, and during the initial stages of the running of the plant a certain amount of this tar was sold to tar-felt manufacturers at a price of 35s. per ton, but sales in this direction ceased owing to an, at present, ineradicable pyroligneous odour which persistently clings not only to the tar itself, but to all the various oils distilled therefrom.

Experiments have also been made with the tar in oil-burning boilers, but owing to the very high percentage of water in the tar—up to 50 per cent.—and the large quantity of solid matter also present, a very large amount of preliminary treatment is necessary. For a considerable period the tar at Portadown was used mixed with coal and burnt under a Stirling boiler; the precise heating value of the tar so consumed has not, however, been ascertained. At the present time the whole factory at Portadown is run entirely on peat fuel, the consumption being about 44 tons per week, of which the producer plant takes about 22 tons. The nature of the peat varies considerably; with good black heavy peat the weekly consumption for all purposes drops as low as 35 tons; and with light top peat from the surface of the boglands the consumption rises to 54 tons. It is also interesting to note that the quality of the peat is reflected in the carrying capacity of the barges, which bring a load of 35 tons with heavy peat and 24 tons light peat. The peat is unloaded from the barges and conveyed to the producer platform and boiler house by a transporter. Clinker troubles are not often experienced, and only when burning the inferior grade of peat, the presence of sand in the fuel causing the trouble.

The author is indebted to Mr. W. A. Mullen, manager at the factory of Messrs. Hamilton Robb Limited, for the following figures in regard to the cost of fuel, these figures being given on June 12 last:—

Cost of running factory on coal per week:—

	£	s.	d.
8½ tons of anthracite at 35s.	14	17	6
19 tons of steam coal at 17s.	16	3	0
	£31	0	6

Cost of running factory on peat per week:—

Say up to 50 tons of peat at 6s.	15	0	0
Weekly saving	£16	0	6

Allowing for 15s. for extra labour, the net weekly saving figures out at £15 5s. 6d.

The author would here refer to the letter in *Engineering* of January 26 last, in which the general manager of the Power Gas Corporation Limited gives some very interesting particulars in regard to peat plants, more especially an ammonia recovery plant working in the south of England. It would be of great interest if some figures as to the working costs of this plant could be laid before this meeting. It will be noted that plant is worked with ammonia recovery, which would mean a very much larger plant than that at Portadown. The amount of the nitrogen in the south of England peat is apparently high, and would appear to be considerably more than in the peat used at Portadown, analysis of which is appended hereto, together with analysis of the refuse tar and gas from the producer.

Much frothing occurred until the water was distilled off. Towards the end the temperature went higher than a mercury thermometer will record (360 degs. Cent.). The different fractions obtained were as follows:—

(1) Water, faintly acid to litmus. Phenol could not be detected.

Analysis of Tar made by Messrs. Potton and Hawthorne.

Sample of Tar No. 2.

The sample was grey when received, but very quickly turned black. On distillation it yielded:—

	Per cent.
1. Water	37·2
2. Light oils (distilling below 230 degs. Cent.)	5·8
3. Middle oils (distilling at 230-270 degs. Cent.)	8·3
4. Heavy oils (distilling above 270 degs.)	23·2
5. Coke	17·8
6. Loss	7·7
	100·00

Analysis of Sample of Peat.

(Received on September 14 from Mr. Hamilton Robb, Portadown.)

Proximate Analysis.

	Per cent.
Water	18·98
Volatile matter	55·17
Fixed carbon	24·75
Ash	1·10
	100·00

Ultimate Analysis.

	Per cent.
Carbon	44·60
Hydrogen	5·42
Nitrogen	0·97
Ash	1·10
Moisture	18·98
Oxygen (by difference)	28·93
	100·00

Analysis of Average Sample of Gas during a 10 Hours' Trial.

Moisture in Fuel 26 *per cent.*

CO_2	10·6
CO	21·0
H_2	13·0
CH_4	3·7
Total combustible	37·7 per cent.
Calorific value (calculated from analysis)	144·0 B.T.U.

(2) Light oils (below 230 degs. Cent.) became rapidly dark red in colour. Specific gravity of crude liquid 0·930.

(3) Middle oils (230-270 degs. Cent.) became dark red. Specific gravity of crude liquid 0·944.

(4) Heavy oils (above 270 degs. Cent.) on standing, crystals of paraffin wax separated out to the extent of 5.42 per cent. of the fraction (equal to 1.26 per cent of the original tar). The specific gravity of the liquid portion of this fraction was 0·906.

EUROPEAN POWER PLANT PRACTICE.

Tar Oil as a Fuel for Diesel Engines.

By Francis G. Wickware.

(From the Practical Engineer.)

Five years ago the manufacture of Diesel engines in Germany was thrown open to competition through the expiration of Dr. Diesel's fundamental patents. Many firms immediately began the manufacture of oil motors of the Diesel type, and the rivalry among them has had the usual large effect on the development of the Diesel engine.

One of the most important directions in which this development has proceeded has been in the adaptation of the motor to operation on fuels other than crude oil or its derivatives. Germany has no petroleum deposits, and fundamentally the problem of securing the position of the Diesel motor in competition with steam and gas engines was one of discovering reliable supplies of cheap fuel of domestic origin.

The recent successful experiments with gas-works tar have already been described in Practical Engineer. These followed logically upon the adaptation of the Diesel motor to operation on tar oil, the possibilities of which were recognized long before the stress of competition led to its practical application as a fuel.

Tar oil is produced in Germany in quantities largely in excess of ordinary demands, and while its use in Diesel engines is not now very extensive, yet the annual consumption for power purposes is some thousands of tons. The fuel is rapidly gaining in popularity, and a recent writer in Gluckauf predicts a consumption this year of 20,000 to 30,000 tons.

Qualities demanded of tar oil for use in Diesel engines are these: It must not contain more than 0.2 per cent. xylene, more than 0.05 per cent. incombustible matter, or more than one per cent. water. At least 60 per cent. by volume must be volatile at 572 degrees F., and the oil must be fluid at 59 degrees F., while the flash point must not be lower than 149 degrees F.

The largest unit yet built for operation on tar oil developes 4,000 h.p., while units of 600 to 800 h.p. are common. Above this limit of power, tar oil engines are exclusively of the horizontal type; below they may be either vertical or horizontal. Engines up to 600 to 800 h.p. have 1 to 4 cylinders on a single crankshaft. The lower limit of power for tar-oil engines is 50 h.p., below which they are not efficient.

As in operation on tar, a certain amount of a lighter oil is required, in most cases, to promote ignition. Paraffin oil or kerosene is commonly used, in amount 5 to 10 per cent. of the tar oil, though recently the proposal has been made to use benzol. The manufacturers are now trying to devise means of avoiding the use

of ignition oil except for starting. One is experimenting with very high compression; another is trying the effect of pre-heating the fuel by means of the waste gases or the jacket water. In all cases, of course, it is possible to run temporarily on tar oil alone under favourable working conditions. With the ignition oil, however, all difficulties of operation are entirely removed. Ignitions are regular, there is little variation of pressure, and the engine adjusts itself to changes of load with steadiness and reliability.

As to the general reliability of the tar-oil motor, the makers guarantee it to be as high as that of the best steam engines, with no higher maintenance charges. In the many plants operating units of 50 to 1,600 h.p., the valves and pistons have given no trouble when properly cared for, and the wear is very small. On account of the fact that it is impossible to eliminate sulphur from the fuel, however, the parts which come in contact with the oil have to be made of special materials. The use of copper-zinc alloys is forbidden; hence, the parts usually made of brass or phosphor bronze are made of pure nickel or 25 per cent. nickel steel.

The consumption of fuel is constant over long periods of operation, and the economy under varying load is very favorable. The results of three months' operation of a 200 h.p. motor are given in the paper under review. In 780 working hours, 86,470 kw. hr. were developed with a total fuel consumption of 32.56 tons. The average consumption per kilowatt-hour was, therefore, 0.755 lbs., or per horse-power-hour, 0.482 lb.

At the prevailing market price of tar-oil, $9.00 per ton, the fuel cost per horse-power-hour was 0.22 cent. During the period the motor was subjected to sudden and considerable changes of load, at times reaching 20 per cent. overload, though the average was considerably under rated load. The consumption of lubricant was small, about 0.18 gal. per hour. Similar results have been obtained in tests of a 60 h.p. motor in the works of the Gasmotorenfabrik Deutz. Taking the cost of tar-oil at $9.00 per ton and of gasoline for ignition at $22.50 per ton, the fuel cost per horse-power-hour worked out as follows: At full load, 0.22 cent; at ¾ load, 0.24 cent; at ½ load, 0.27 cent; and at ¼ load, 0.37 cent.

Including all accessories, the cost of a 120 h.p. tar-oil motor installed is about $7,500, and of a 440 h.p. unit $18,750. A careful estimate of the first and operating costs of 120,440 and 1,000 h.p. units is as follows:

	1,000 h.p.	400 h.p.	120 h.p.
First cost	$37,500	$18,125	$7,250
Annual operating cost:			
3,000 hours per year	12,050	6,000	2,315
8,600 hours per year	26,325	12,325	4,475
Operating cost per h.p. hour, cents:			
3,000 hours per year	0.4	0.45	0.64
8,600 hours per year	0.3	0.32	0.44
Fuel cost per h.p. hour, cents:			
3,000 hours per year	0.23	0.23	0.23
8,600 hours per year	0.23	0.23	0.23

PRESENT STATUS OF THE DIESEL ENGINE.

Following his election to honorary membership in the American Society of Mechanical Engineers, on April 30th, Dr. Rudolph Diesel, inventor of the well-known engine bearing his name, delivered a lecture upon "The Present Status of the Diesel Engine." While the general scope of the lecture was along much the same lines as his London address of some weeks ago, and many of the points had been brought out from time to time in the technical press, still the paper covered in logical order the development of the Diesel engine from its inception to its present position as an important commercial factor. Furthermore, many points were brought out which are not of common knowledge, especially as applied to American practice.

Fuel.

By way of introduction, Dr. Diesel pointed out the influence which his engine is having upon the coke and gas industries in Europe, the by-products from these, such as tar and creosote oils as now produced, being especially adaptable for use in the Diesel engine. Of course this is not of so great importance in the United States on account of its richness in natural oil, but it is of utmost importance to those countries which have practically no oil production of their own. For instance, it is estimated that the tar production of Germany is sufficient for furnishing approximately 1¾ million h.p. for 300 days of ten hours each per year.

Dr. Diesel also called attention to the fact that it is possible to use vegetable and animal oils in his engine, a fact not generally known. While this is insignificant at present, in the course of time it may play an important part.

. . . . . .

Dr. Diesel stated the aggregate of Diesel engines in the United States is at present about 300 units, having a combined horse-power of 150,000. He then showed views of a number of these plants. The largest is that of the Prairie Pebble Phosphate Company at Mulberry, Fla. This comprises sixteen Diesel engines arranged in eight double units of 450 h. p. each, and served by five air compressors.

Another important American Diesel engine plant is that of the United Gas Improvement Co., in Philadelphia, which has three 255-h. p. engines.

. . . . . .

Marine Engines.

In reviewing the application of his engine to marine practice, Dr. Diesel stated that at the start attempts were made to make the four-stroke-cycle

engine reversible. This resulted in a very complicated mechanism, and although a few of these are still being built, this type has almost entirely given place to the reversible two-stroke-cycle engine, which for marine work also embodies other advantages, such as less weight, etc.

Very important experimental work is now being carried on for the purpose of developing high-power marine engines with cylinder units reaching 1,000 to 2,000 h. p. with single acting piston, which permits free expansion of the cylinder under the action of high temperatures.

Dr. Diesel stated that there were at present 365 ships fitted with Diesel engines. One of these, around which popular interest centres, is the "Fram," in which Captain Amundsen made his successful trip to the south polar regions.

Also two submarines for the United States Navy are being fitted out with Diesel engines.

Diesel Locomotive.

One of the most interesting points covered by Dr. Diesel's lecture was the application of his engine to locomotives. This is an entirely new phase of the subject and, although experiments have been in progress for the past five years at the Winterthur works of Sulzer Bros., practically nothing has heretofore been made public regarding it.

The first locomotive which is of 1,200 h. p. has just been completed and is at present undergoing tests. The application of the Diesel engine to locomotive practice presented a rather difficult problem, owing to the difficulties of manoeuvering with this type of motor, and to the limitations in space and weight.—"Power," May 28, 1912.

THE INTERNAL COMBUSTION ENGINE AND THE GAS PRODUCER.

There has been considerable discussion recently concerning the longevity of the coal fields of the country. With the increasing depletion of the coal deposits there has been a momentum given to hydro-electric installations, and an increasing demand for information concerning the possibilities of power from the internal combustion engine and the gas-producer. Only last week we noted in the "Canadian Engineer" that the Province of Saskatchewan had appointed a consulting engineer to make an exhaustive report on the lignite deposits of the Province and their power-producing possibilities. The United States Bureau of Mines has been conducting investigations into the possibility of generating producer gas for power purposes in a commercial way from the various mineral fuels of the country. These investigations have been associated with steaming, briquetting, coking, and other tests, all of which supplemented an examination into the nature, extent and distribution of the fuels used. The tests have been used with carefully selected representative samples and carload lots of coal, lignite, etc., procured especially for the purpose by experienced collectors.

The investigations have shown the adaptability of the gas-producer for the utilization of low-grade coal, lignite, peat, etc. As mined, these fuels cannot be used in boiler furnaces and will not bear long transportation, but the gas-producer makes them of potential value. Where deposits of low-grade coal, lignite, and peat are found, the present cost of power, as developed in steam plants with coal that has been shipped a considerable distance, can be materially reduced by placing producer plants at the mines or bogs so as to utilize these low-grade fuels without cost of shipment by generating electric current, which can be easily transmitted to desired points within a wide radius.

The tests in the gas-producer have shown that many fuels of so low grade as to be practically valueless for steaming purposes, such as slack coal, bone coal, and lignite, may be economically converted into producer gas, and may thus generate sufficient power to render them of high commercial value.

It is estimated that on an average each coal tested in the producer-gas plant developed two and one-half times the power that it would develop in the ordinary steam boiler plant. Investigations into the waste of coal in mining have shown that it probably aggregates 250,000,000 to 300,000,000 tons yearly, of which at least one-half might be saved. It has been demonstrated that the low-grade coals, high in sulphur and ash, now left underground, can be used economically in the gas-producer for the ultimate production of power, heat, and light, and should, therefore, be mined at the same time as the high-grade

coal. The investigations also show that the general use of gas-producers for the development of power means the elimination practically of the smoke nuisance. This result is especially important in cities that are compelled to use bituminous coals. The great saving in fuel obtained through the gas-producer has led to the installation within the last decade of several hundred of these power plants throughout the country. These producer plants are practically smokeless during operation. The establishment of producer-gas plants at the mines and the distribution of electric energy or gas over large areas will also tend to eliminate smoke. When a large percentage of the small, isolated power and heating plants and all steam locomotives have been removed from the larger cities, the atmosphere of these cities will be much clearer, and heavy financial losses directly traceable to smoke will be eliminated.—"The Canadian Engineer."

PEAT, AND ITS UTILIZATION FOR POWER PURPOSES.

The successful utilization of peat for power production on a large and economical scale at Portadown, Ireland, would appear to fully justify the convictions so forcibly and frequently expressed by Dr. Eugene Haanel, Director of Mines for the Dominion, concerning Canadian potentialities in this regard. The conditions are ripe, in Ontario at least, for experimentation on the part of industrial concerns, to determine how cheaply power may be developed in certain districts from peat fed to gas producers. Really, that is the only point upon which more precise data is, perhaps, desirable or necessary. Not long since, when reporting on an important copper property near Temagami, Mr. Jno. E. Hardman strongly recommended that for the operation of a plant and for the generation of power required for the local reduction of the ores, the peat bogs of that neighborhood be turned to account. There are many other localities where conditions are similar and where the utilization of peat would enormously benefit and cheapen the cost of mining.—The Canadian Mining Journal.

PEAT AS AN AGRICULTURAL ASSET.

Extracts from paper read by Thomas S. Gladding, A.M., New York, at Kalamazoo Meeting of the American Peat Society.—Journal of the American Peat Society, Vol. v., No. 1.

What is a peat-bog in the eyes of the agriculturist? Simply an immense natural manure pit, provided by the kindness of past centuries, to be conserved and utilized by the modern farmer.

A brief study of soils as they are found at the present day will point out the proper method of application of this valuable deposit. Wiley, in his "Agricultural Analysis," gives eight kinds of soil, as follows:

"1. Sand. Soils consisting almost exclusively of sand.

"2. Sandy Loams. Soils containing some humus and clay, but an excess of sand.

"3. Loams. Soils inclining neither to sand nor clay and containing some considerable portions of vegetable mold, being very pulverulent and easily broken up into loose and porous masses.

"4. Clays. Stiff soils in which the silicate of alumina and other fine mineral particles are present in large quantity.

"5. Marls. Deposits containing an unusual proportion of carbonate of lime, with often some potash or phosphoric acid resulting from the remains of sea animals and plants.

"6. Alkaline. Soils containing carbonate and sulfate of soda, or an excess of these alkaline and other soluble mineral substances.

"7. Adobe. A fine-grained, porous earth of peculiar properties hereinafter described.

"8. Vegetable. Soils containing much vegetable debris in an advanced state of decomposition. When such matter predominates or exists in large proportion in a soil the term tule, peat or muck is applied to it."

A few years since I visited a coral island in the Caribbean Sea, investigating a phosphate deposit. The soil was practically a pure carbonate of lime, or chalk. This soil is an illustration of soil number five, or a marl soil. Large areas of Long Island are almost pure sea sand and illustrate class number one. These soils are practically worthless for agricultural use. The addition of organic matter will convert them into fertile soil. I have traveled over the great wheat fields of western Canada and seen a farmer turning up with his plow the rich black loam that exists to a depth of three feet or more.

What constitutes the difference between the worthless sand soil and the

worthless chalk soil and the rich black loam? Principally the presence in the latter of a large amount of thoroughly decomposed organic matter that constitutes what we call humus or humus material.

What now are the beneficial results of mixing peat, rich in humus, with soils deficient in vegetable matter?

1. The first beneficial result is the **lightening** of the soil.

The weights of a cubic foot of different kinds of soil, as given by Schubler, are as follows:

	Pounds.
Sand	110
Sand and clay	96
Common arable soil	80 to 90
Heavy clay	75
Vegetable mold	78
Peat	30 to 50

In general the specific gravity of soil decreases inversely as its content of humus.

A study of these figures shows that if we add to a heavy soil composed of sand weighing 110 pounds per cubic foot, an equal amount of peat weighing 40 pounds per cubic foot, we shall have a resulting soil weighing 85 pounds per cubic foot. If a soil of mixed sand and clay weighing 96 pounds per cubic foot is mixed with peat weighing 40 pounds per cubic foot, the resulting soil will weigh 68 pounds per cubic foot.

2. The second beneficial result is in the increased **absorption of solar** heat by such a soil.

"The quantity of heat absorbed from the sun by the earth is an important factor in the growth of vegetation. As has been established in the physics of heat, a black surface, other things being equal, will absorb a larger amount of heat than one of any other color, so that, other things being equal in the physical and chemical composition of a soil, variations in the amount of organic matter producing greater or less black coloration will affect the heat absorption. Thus, black soils, in the conditions above mentioned, will absorb more heat than lighter colored soils. As a result, the vegetation in such soils gets an earlier start in the spring and matures more rapidly. As an illustration of this it may be noted that the black prairie soils of Iowa produce uniformly crops of maize which mature before the early frosts, while crops grown on lighter soils much farther south often suffer injury from that source."

3. The third beneficial result is the **increased capacity** of the soil to **absorb and retain moisture.**

I quote some experiments from Wiley on this subject:

"A sample of soil from the beet sugar station, in Nebraska, gave the following results:

"First trial _____45.75 per cent. water absorbed.

"Second trial _____44.85 per cent. water absorbed.

"Muck soil from Florida, containing varying proportions of sand, gave the following numbers:

"Soil number one, 144.85 per cent. and 145.43 per cent. Soil number two, 109.13 per cent. and 107.93 per cent. Soil number three (very sandy), 46.86 per cent. and 46.51 per cent."

As the percentage of peat increases, the capacity of the soil to absorb and retain water also increases.

4. The fourth beneficial result is the **slower evaporation,** or decreased coefficient of evaporation.

If a number of zinc boxes are filled with different kinds of soil and exposed to the sunlight, it will be found that "the rapidity of evaporation in the samples of soil rich in humus and clay will be decreased as compared with the sandy soils."

Let us recapitulate briefly the four advantages that are obtained by the mixture of humus soils with other soils.

1. The lightening of the soil.
2. The increased absorption of solar heat.
3. The increased capacity to absorb and retain water.
4. The slower loss of water from evaporation.

The above four advantages which are obtained by the admixture of peat soil or humus soil with other soils are wholly physical or mechanical in character. They are wholly apart from the fertilizer ingredients that are present in the peat soil. I have no hesitation in saying that the agricultural value of a peat soil which comes from the four physical properties above mentioned, is far greater than the agricultural value derived from the mere fertilizer ingredients present in such peat soil. When we reflect that a sun-dried peat soil, containing 50 per cent. of dry material, most of which is organic matter, can be bought at the present time for the market value of the mere fertilizer ingredients therein contained, and that all the benefits, which are of far greater value than mere fertilizer ingredients, are obtained free of cost, we see the great importance of urging upon all farmers the importance of using such a valuable material, especially for admixture with clay and sandy soils.

Let us now turn to a consideration of humus soil from a chemical or fertilizer standpoint.

Snyder (Soils and Fertilizers), says: "The term humus is employed to designate the most active of the organic compounds. It is the animal and

vegetable matter of the soil in the intermediate forms of decomposition. Its quality varies with the material from which it is derived. When easily obtained, muck is one of the cheapest forms of nitrogen."

Johnson (Agr. Chemistry): "The organic matter of the soil is chiefly composed of a brown or black substance to which the name humus has been given, composed of compounds of carbon, hydrogen and nitrogen. All these compounds retain ammonia with great tenacity, a property of great utility in connection with the supply of nitrogen to plants. The more organic matter a soil contains the more nitrogen will be present as a rule."

Conn (Soil Bacteriology): "There is a vast difference in the fertility of a sand and a garden soil. Sandy soil may contain all the mineral matters but it lacks the something needed for plant growth which the garden soil contains. This something is called humus. It is the remains of life of previous generations: in a state of decay, plants, animals and micro-organisms contribute to it. Humus is decayed organic matter."

Hilgard (Soils, page 135): "Soil humus is doubtless the chief depository of soil nitrogen and the main source from which, through the process of nitrification, the nitrogen supply of plants is usually derived."

Also page 133: "Not only humus but the insoluble colloid humates produce in the soil a loosening effect, or tilth, which apparently cannot be brought about in any other way."

Hilgard (Soils, page 127): "Normal humus stands very close to peat. Even black peat requires time and aeration (cultivation) and lime neutralization, to serve the purposes of humus in the soil."

Hilgard (page 140, Soils): "Synder has shown that the richer the organic matter is in nitrogen the more energetically it acts in rendering available the mineral matters of the soil for plant nutrition."

Ladd (Bulletins, Dakota Stations, 24, 32, 35, 47): "With the increase of humus in the soil there is a corresponding increase in the amounts of mineral plant foods extracted from the soil by the Grandeau method."

Hilgard (Soils, page 358): "Nitrification for two years between soil containing only actual humus and that containing only decayed matter, showed 14 times more nitrification in the actual humus material, although the undecayed matter was 40 per cent. of the total in the original soil."

Hilgard (Soils, page 357): "The writer believes that the mainly important source of nitrogen to the plant is the nitrification of the humus nitrogen. The unhumified vegetable matter being of no definitely ascertainable value and the nitrates, varying from day to day, being liable to loss by leaching at any time, therefore forming no permanent feature of the soil."

Johnson (pages 155-156): "A due admixture of organic matter is favorable to fertility the more valuable in proportion to the nitrogen it contains."

Conn (Bacteriology, page 63): "Nitrification caused by bacteria is necessary to produce plant food. Ordinary humus will produce plenty. Soil deficient in humus shows little."

Hilgard says humus is the natural food and habitat of the soil bacteria.

Snyder (page 109): "In many of the western prairie soils under cultivation 30 years the humus has been reduced one-half and crop production becomes poor."

Snyder (page 112): "Humus enables soil to store up water and resist drought."

Whitney (Bureau of Soil), states: "Humus renders the soil sanitary, rendering harmless the toxic substances of the soil."

The foregoing authorities practically agree that chemical analyses and culture tests have proved that peat or muck humus in proper condition is

(1) Similar to ordinary soil humus

(2) That its value is in every way enhanced by higher nitrogen content.

(3) That it has many important and essential functions, physical, chemical and biological, in contributing to plant growth.

(4) Hilgard shows that the thoroughly decayed matter or actual humus has much greater value than unrotted material such as the organic matter of soiling crops or manure unhumified.

Prof. Chas. A. Davis, Peat Expert, Bureau of Mines, cites, in a letter, a field test of the North Carolina Experiment Station in 1907 with a crop of cotton, when plots were fertilized with dried blood (ammoniate) and dry peat (as ammoniate), respectively. The plot fertilized with peat showed 53 per cent. increase, while the dried blood plot showed 46 per cent. increase. The amounts of actual nitrogen in the peat and blood were equal.

Also Bulletin No. 204, Wisconsin Agr. Exp. Station: "In these experiments low grade peat combined with 4 lbs. of muriate of potash and 8 lbs. of acid phosphate to the ton was compared with ordinary manure. Each succeeding year for four (4) years results were noted and in the fourth year the originally poor, sandy soil gave a larger yield of corn where the peat was used than the plot fertilized with manure."

H. B. Fullerton (Agricultural Director, Long Island R. R.): "For a number of years we have been seeking something to supply the exhausted leaf mold or vegetable matter which is the prime requisite for vigorous plant growth. Strawy manure, long used to accomplish this end, is at the present day difficult to secure, hard to handle and offensive, hence we have tried everything we could find with varying success until we struck the black vegetable mold or humus from Alphano. This we have tested most thoroughly at both Experimental Stations with universal success, having raised celery, onions, lettuce and many other crops with no other aid on the light, sandy

loam in the central section of Long Island. We have also been able by its use to keep our lawns in superb condition throughout the usual dry season of summer. Hence we have no hesitancy in saying that the utilization of this vegetable matter is a rational method of treating even the unpromising raw material obtained from city cellars, an admixture assuring lasting fertility."

The consensus of expert opinion is unanimous as to the great value of peat as a soil maker, a soil renovator and a fertilizer. The farmer is learning to save and to utilize more carefully his barnyard manure. He is also learning to appreciate the benefits of a wise and intelligent use of commercial fertilizers.

We do not need to depreciate these valuable materials, in order to advocate peat. But we must learn to appreciate the immense value of the greatest natural fertilizer that nature has provided with such generous hand for the agriculture of our day.

Journal of the Canadian Peat Society

Published Quarterly by

THE CANADIAN PEAT SOCIETY

22 Castle Building, Ottawa, Can.

Officers : 1911-12

Honorary President : Dr. Eugene Haanel, Director of Mines, Ottawa, Can.

President : J. McWilliam, M.D., London, Ont.

Vice.-President : J. M. Shuttleworth, Brantford, Ont.

Executive Committee : A. W. Fleck, John R. Reid, and Frank Pedley.

Secretary-Treasurer : Arthur J. Forward, B.A., Barrister, 22 Castle Building, Ottawa, Can.

Subscription Price (4 numbers) **$1.00**

Advertising rates will be furnished on application.

Remittances may be made by cheque (payable at par in Ottawa), draft, money order, or postal note to the Secretary-Treasurer of The Canadian Peat Society, 22 Castle Building, Ottawa, Can.

EDITORIAL.

The issue of the present double number of the Journal has been delayed in order to include an abstract from the very able and carefully prepared report by Mr. B. F. Haanel, Chief of the Fuel Testing Division of the Department of Mines on the Utilization of Peat Fuel for the production of power, which appears in the foregoing pages. Mr. Haanel's report, which covers 145 pages, and is splendidly illustrated, is without doubt the most important record of original investigation into the utilization of peat fuel for the production of power yet issued on this continent.

It is divided into two parts, the first of which gives detailed results of experiments conducted at Ottawa with a Korting peat gas-producer as

originally installed by the manufacturers. Part 2 covers experiments with the same plant altered to meet difficulties arising in the first set of experiments, and with a new cleaning system devised by Mr. Haanel. Throughout the report the facts are clearly and logically set forth, and are accompanied by copious details of results and operation, which make it a valuable addition to the literature on the subject. The report is admirably printed on good paper, and the illustrations are excellent. Features which will be welcomed by the general reader are the clear expositions of the theory of producer-gas, and of the principles underlying the operation of the gas engine, which will materially aid in rendering it of service to the ordinary business man who has not a special technical knowledge of the matters dealt with. No person in any way interested in the development of the peat industry should fail to secure a copy of this useful publication, which may be had on application to Dr. Eugene Haanel, Director of Mines, Department of Mines, Ottawa, Canada.

In the February number there appeared a petition addressed to the Minister of Mines, asking for a government investigation of peat gas power installations in Europe, with and without recovery of by-products.

Although the matter is still in abeyance, owing to the transfer of the Mines Branch to the Department of the Interior, and other reasons, it is hoped that, in view of the great economic importance of the proposed investigation, action will be taken upon it some time early in the approaching Session of Parliament.

While the manufacture of air-dried peat fuel for domestic purposes, the establishment of which in Canada was the first object of the government's efforts, must be regarded as of great importance, the production of cheap power from our peat bogs is no less worthy of attention. Peat fuel, being more bulky and low-priced than coal, will not stand the cost of transportation for long distances. Its utilization for power production at, or near, the bog will materially aid in placing the industry on a commercial basis. In some cases, undoubtedly, the latent wealth existing in the peat bogs may be better conserved and utilized to greater economic advantage by the manufacture of other products as well as fuel. Electric energy generated from peat at the bog can be distributed from a central power station, and employed to furnish cheap light and power to a number of places where water-powers are not conveniently available; and its benefits might even be extended to the farming community over considerable areas adjacent to large peat bogs.

Among the valuable by-products obtained are tar and sulphate of ammonia. A wide field for the profitable use of peat tar has lately been opened up by the discovery that tar oils, and even moderately thick tar, can

be used as fuel for Diesel oil engines. The Diesel engine, as appears from an article in the foregoing pages, is coming into very extensive use. A vessel equipped with a Diesel engine, recently put on the St. Lawrence route, has effected great savings in cost of carriage of freight, and it is predicted by a marine expert that the entire Great Lakes fleet will, before long, be equipped to burn oil, with a consequent important reduction in freight charges.

Canadian peat bogs examined are very rich in nitrogen, which can be saved in the form of sulphate of ammonia, a valuable fertilizer selling ordinarily at about $60.00 per ton, but which during the past summer has sold as high as $75.00 per ton. The European market for fertilizers is extensive, Italy alone purchasing to the value of about twenty million dollars. While the local market will be comparatively small at the outset, it is increasing rapidly. According to the Statistical Year Book, our imports of fertilizers in 1902 were valued at $84,996, and in 1903 at $112,256, while last year they exceeded half a million dollars in value. The following table shows imports during the last four years:—

	Dutiable	Free	Total
1908	$259,132	$110,034	$369,166
1909	341,102	131,573	474,675
1910	350,907	130,549	481,456
1911	399,597	146,560	546,157

A very important feature of some of the European installations for production of electric power and by-products from peat gas, is that they can be operated with peat fuel containing a relatively high percentage of moisture, thereby avoiding to a great extent the cost of drying the peat, which has always been one of the outstanding difficulties in its utilization as a fuel.

In the Journal of the American Peat Society for April (Vol. 5, No. 1) appears a paper read at the Kalamazoo meeting in September last, by Mr. L. B. Lincoln, on "An Up-to-date Peat Plant." A reference to the Canadian government plant at Alfred, which it contains, is very misleading and would appear to have been inserted subsequently to the reading of the paper. The paragraph reads:—

"The Swedish system referred to before was investigated and an outfit was purchased by the Canadian Department of Mines. It was imported and set up at Alfred at great cost as a demonstration of the air-drying theory."

"Statements of the final and unsuccessful outcome of this experiment, and how and why it was finally abandoned, are within the reach of all and we can therefore refrain from considering them at the present moment."

The outcome of the operation of the government plant cannot be fairly described as unsuccessful, inasmuch as the object for which it was erected has been fully achieved. It is quite true that Dr. Haanel urged the necessity of substituting mechanical equipment for the hand labour employed at the small demonstration plant, in order to establish the manufacture of peat commercially in Canada. The government plant has never been abandoned, and it did not resume operations during the present season solely because arrangements had been made whereby private capital has stepped in and erected a much larger plant embodying the features recommended by Dr. Haanel for conduct of operations on a large commercial scale. But it should not for a moment be lost sight of that the prime object of the installation of the government plant, viz., demonstration of the manufacture of air-dried machine peat, has been fully and successfully accomplished.

Mr. Lincoln discloses in his paper what was probably the chief reason for the unsatisfactory results he obtained last year when he says:—

"The third point in our system consisted during the last season of an exact copy of the 'Anrep' delivery system employed by the Canadian Government."

The delivery system referred to was specially designed for and adapted to be used in connection with small plants with a maximum capacity of 3,000 to 3,500 tons per season, in the operation of which the peat is dug entirely by manual labor, and it works satisfactorily in connection with such a plant, as the existence of hundreds of successful installations in Europe amply proves. To attempt to link up such a system, however, with a mechanical excavator of enormously greater capacity appears to have been due to an engineering oversight.

PATENTS RELATING TO PEAT ISSUED BY THE CANADIAN PATENT OFFICE.

	Number.	Date.
Peat, Process for drying raw. Brune & Horst	137963	Jan. 23, 1912
Peat, Molding and Spreading Machine. A. Anrep	141700	July 16, 1912
Peat by pressure. Separation of water and solid substances of carbonized, Keeble, H. & A. C.	142519	Aug. 27, 1912
Peat, Apparatus for treating. A. Anrep	142632	Sep. 3, 1912

Patent No. 137963 (Jan. 23, 1912.)

Heinrich Brune and Heinrich Horst of Frankfort on the Maine, Germany. (Assigned to Eugen Abresch.)

Process for drying raw peat in presses with use of porous admixtures to make the raw peat pervious.

The invention consists in adding to the raw peat to be pressed, compressed peat which has been dried hard, which can be withdrawn continuously from the finished product. It is claimed that this admixture gives to the raw peat the property of giving up in the press the whole of the water it contains. It is pointed out that peat dust is not applicable as admixture for the purposes of the invention because it is not sufficiently dense, and the mixing and pressing must be performed very quickly in order to prevent the peat dust from falling out of the raw peat.

The commercial failures arising from attempts to utilize for this purpose ashes, small coals, sawdust, chaff, coke made from coal and peat, comminuted straw and the like are cited. In particular the failure of peat coke as an admixture is mentioned, and said to be due to the fact that the ignition temperature of the coke is higher than the combustion temperature of the peat, so that the peat burns without ignition of the coke.

Claims:—

1. A process for drying raw peat, which process consists in mixing with the raw peat hard dried compressed peat, and pressing the mixture.

2. A process for drying raw peat, which process consists in mixing with the raw peat hard dried compressed peat and subjecting the mixture to a continuously and gradually increasing pressure.

Patent No. 141700 (Sept. 3, 1912.)

A. Anrep of Helsingborg, Sweden.

Peat Molding and Spreading Machine.

The machine comprises a filling frame resting in front on one or more rollers and at the rear on the moulding frame. The latter is connected with the filling frame by means of a pivot shaft or hinge adapted to swing upward, and to trail on the drying ground when the machine is dragged forward.

The mould board which has for its object to smooth and mould the peat cake without dragging it or tearing it into pieces, is horizontal or nearly so. At the rear end of the machine are movable dividing tongues or fingers on which are cutting knives intended to divide the peat cake into strips. The rollers in front serve to compress and level the drying ground in advance of the moulding apparatus, and also furnish centres of rotation when the apparatus is turned. A horizontal screw in front of the moulding frame, which is rotated by the shaft of the rollers, divides the peat and gives it the desired thickness before it arrives under the cover of the moulding frame, which by means of its horizontal cover exerts a vertical pressure on the peat mass, producing a good and uniform moulding action.

The rollers are loose on the shaft with the exception of the middle one which furnishes the power for driving the screw, and when the apparatus is turned the outer rollers rotate freely on their shaft.

Owing to the fact that the moulding frame is adapted to swing vertically round its pivot shaft, the frame receives a part of the weight of the framework and is adapted to follow the irregularities of the drying field.

Claims:—

1. In a peat moulding and spreading machine of the character described, a framework adapted to receive the previously prepared peat, a moulding frame mounted in the rear thereof and adapted to exert a vertical downward pressure on the peat passing thereunder, and means for spreading the prepared peat to a uniform thickness prior to passage beneath the moulding frame.

2. In a peat moulding and spreading machine of the character described, a frame work to receive prepared peat, a moulding device mounted in the rear of said frame and adapted to exert a vertical downward pressure on the peat passing thereunder, and a spreading screw mounted in said frame in advance of said moulding device.

3. In a peat moulding and spreading machine of the character described, a frame work to receive prepared peat, a moulding device mounted in the rear of said frame and adapted to exert a vertical downward pressure on the peat passing thereunder, a spreading screw mounted in said frame in advance of said moulding device, and rollers carried by the forward part of said frame and adapted to level the irregularities of the field.

4. In a peat moulding and spreading machine of the character described, a framework to receive prepared peat, a moulding device mounted in the rear of said frame and adapted to exert a vertical downward pressure on the peat passing thereunder, a spreading screw mounted in said frame in advance of said moulding device, rollers carried by the forward part of said frame and adapted to level the irregularities of the field, and means for driving said screw from said rollers.

Patent No. 142519 (Aug. 27, 1912.)

Horace Keeble and Arthur Cecil Keeble, The White House, Wareham, England.

Hitherto satisfactory separation of wet carbonized peat and its associated water, and conversion of the peat residue into a compressed solid with a minimum of liability to disintegration under conditions to which it is likely to be subjected have been difficult of accomplishment.

Processes necessitating heat for evaporating the main portion of the water are expensive, whilst, by reason of the finely divided and greasy condition of the carbon, attempts to separate the combined peat and water by applying pressure have been unsatisfactory, since, in the case, for instance, of perforated plates the material passes away with the water, whilst if fibrous material, as flannel, be employed, clogging results.

It is claimed that both these disadvantages of separation by pressure can be overcome by interposing between the material and the water exit several layers of wire gauze maintained in close contact with one another and held firmly between smooth metal or other hard surfaces, so that escape of expressed water must be through portion of the gauze layers gripped between such surfaces. Usually, it is stated, two layers of gauze suffice, suitable degrees of fineness being between the limits of say 90 holes per square inch and 30 holes per square inch. The different layers of gauze may be of the same or different mesh.

In the four accompanying figures various forms of apparatus suitable for carrying out the invention are set forth, and numerous details in the same are covered with twenty-three claims. Claim 1, which broadly covers the invention, is as follows:—

1. In apparatus for the separation of water and solid substances, a press mould formed with water exit openings, a press piston arranged to work within said mould and the water exit openings thereof, and bodies with smooth hard surfaces between which said layers of gauze are firmly held.

Patent No. 142632 (Sept. 3, 1912.)

A. Anrep of Helsingborg, Sweden.

Apparatus for Treating Peat.

Claim:—

"A machine for treating peat comprising, a cylindrical body having a receiving chamber provided with a feed inlet in its top, and having a delivery through said chamber and body, means for rotating said shaft, coarse cutting knives on said shaft and arranged directly beneath said feed inlet opening, a plurality of stationary knives fixed to the interior of said receiving chamber and co-operating with said coarse cutting knives, a set of stationary knives extending diametrically across the interior of said body at the point where the receiving chamber joins the body, a set of fine cutting knives secured to the aforesaid shaft directly in the rear of the last mentioned stationary knives and co-operating therewith, and a plurality of kneading arms arranged radially about said shaft from a point adjacent said fine cutting knives to the opposite end of the shaft."

Peat is treated in the machine in such manner that the roots and fibres are cut, and it is thereafter subjected to an intense cutting between movable and stationary knives and afterwards pressed through a kneading and mixing apparatus, whereby the final product acquires uniform plastic properties, so that uniform moulding is possible while the contractibility of the peat during the drying operation is considerably increased, and a heavy and hard product obtained, which is not very absorbent of moisture.

The novelty of the invention resides in the correct and subsequent combinations of the various phases of the process in such a manner that they succeed each other immediately and without interruption.

COAL STATISTICS (1892-1911).

(1) IMPORTS OF COAL INTO CANADA.

Fiscal Year	Bituminous coal †Tons	Bituminous coal Value $	Anthracite coal and Anthracite dust †Tons	Anthracite coal and Anthracite dust Value $	Bituminous Coal dust †Tons	Bituminous Coal dust Value $
1892	1,615,220	4,099,221	1,479,106	5,640,346	82,091	39,840
1893	1,603,154	3,967,764	1,500,550	6,355,285	109,585	44,474
1894	1,359,509	3,315,094	1,530,522	6,354,040	117,573	49,510
1895	1,444,928	3,321,387	1,404,342	5,350,627	181,318	52,221
1896	1,538,489	3,299,025	1,574,355	5,667,096	210,386	53,742
1897	1,543,476	3,254,217	1,457,295	5,695,168	225,562	59,609
1898	1,684,024	3,179,595	1,460,701	5,874,685	229,445	45,556
1899	2,171,358	3,691,946	1,745,460	6,490,509	276,547	44,717
1900	2,439,764	4,310,964	1,654,401	6,602,912	330,174	98,349
1901	2,516,392	4,956,025	1,933,283	7,923,950	414,432	275,559
1902	3,047,392	5,712,058	1,652,451	7,021,939	489,548	264,550
1903	3,511,412	7,776,717	1,456,713	7,028,664	550,883	420,317
1904	4,053,900	9,108,208	2,275,018	10,461,223	608,041	544,128
1905	4,176,274	8,002,896	2,604,137	12,093,371	650,261	343,456
1906	4,495,550	8,360,348	2,200,863	10,304,308	747,251	489,180
Calendar Year	Bituminous round and run of mine				Bituminous slack such as will pass through ¾ in. screen	
1907	6,370,152	13,232,445	3,141,873	14,506,129	1,139,256	1,121,949
1908	6,025,574	12,516,748	3,160,110	14,478,536	1,111,811	1,355,677
1909	5,625,063	11,455,818	3,017,844	13,906,152	1,230,017	1,469,889
1910	(a)5,966,466	11,919,341	(b)3,266,235	14,735,062	(c)1,365,281	1,795,598
1911	8,905,815	18,407,603	4,020,577	18,794,192	1,632,500	2,090,796

(a) Duty, 53c. per ton. (b) Duty free. (c) Duty, 14c. per ton.
†Ton of 2000 lbs.

(2) CONSUMPTION OF COAL IN CANADA.

Calendar Year	Canadian Tons	Imported Tons	Total Tons	Percentage Canadian	Percentage Imported	Consumption per capita Tons
1892	2,464,012	3,082,429	5,546,441	44.4	55.6	1.133
1893	2,823,187	3,110,462	5,933,649	47.6	52.4	1.198
1894	2,743,376	2,917,818	5,661,194	48.5	51.5	1.130
1895	2,467,109	2,933,752	5,400,861	45.7	54.3	1.066
1896	2,639,055	3,206,456	5,845,511	45.1	54.9	1.140
1897	2,799,977	3,124,485	5,924,462	47.3	52.7	1.143
1898	3,023,079	3,274,981	6,298,060	48.0	52.0	1.200
1899	3,631,882	4,092,361	7,724,243	47.0	53.0	1.454
1900	3,989,542	4,361,563	8,351,105	47.8	52.2	1.561
1901	4,912,664	4,810,213	9,722,877	50.5	49.5	1.797†
1902	5,376,413	5,165,938	10,542,351	51.0	49.0	1.895
1903	6,005,735	5,491,870	11,507,605	52.2	47.8	2.018
1904	6,697,183	6,909,651	13,606,834	49.2	50.8	2.325
1905	7,032,661	7,343,880	14,376,541	48.9	51.1	2.391
1906	7,927,560	7,398,906	15,326,466	51.7	48.3	2.477
1907	8,617,352	10,549,503	19,166,855	45.0	55.0	3.034
1908	9,156,478	10,195,424	19,351,902	47.3	52.7	2.976
1909	8,913,376	9,711,826	18,625,202	47.9	52.1	2.779
1910	10,532,103	10,438,123	20,970,226	50.2	49.8	3.031
1911	9,822,749	14,424,949	24,247,698	40.5	59.5	3.388

†Consumption per capita since 1900, based on late census returns.

(3) PRODUCTION OF COAL BY PROVINCES.

	Nova Scotia (tons)	New Brunswick (tons)	Sask-atchewan (tons)	Alberta (tons)	British Columbia (tons)	Yukon (tons)
1892	2,159,389	6,768	5,400	178,970	937,218	
1893	2,444,924	6,200	8,325	230,070	1,093,980	
1894	2,527,982	6,469	15,051	184,940	1,112,628	
1895	2,225,145	9,500	15,769	169,885	1,058,045	
1896	2,508,570	7,500	16,706	209,162	1,003,769	
1897	2,403,554	6,000	25,000	242,163	1,019,390	
1898	2,563,180	6,160	25,000	315,088	1,263,680	
1899	3,148,822	10,528	25,000	309,600	1,431,101	
1900	3,623,536	10,000	40,500	311,450	1,791,833	
1901	4,158,068	17,630	45,000	340,275	1,919,488	5,864
1902	5,161,316	18,795	70,400	402,819	1,808,441	4,910
1903	5,653,338	16,000	116,703	495,893	1,676,581	1,849
1904	5,596,241	9,112	124,885	661,732	1,862,625	
1905	5,646,583	29,400	107,596	931,917	1,945,452	7,000
1906	6,220,505	34,076	118,398	1,246,360	2,146,262	7,000
1907	6,354,133	34,584	151,232	1,591,579	2,364,898	15,000
1908	6,652,539	60,000	150,556	1,685,661	2,333,708	3,847
1909	5,652,089	49,029	192,125	1,994,741	2,606,127	7,364
1910	6,431,142	55,455	181,156	2,894,469	3,330,745	16,185

CANADA'S SUPPLY OF COAL.

Central Canada is constantly within measurable distance of a coal famine; nor are the conditions which may precipitate such a famine in any considerable degree within the country's control. This is due to the fact that all eastern and central Canada is dependent on the Pennsylvania fields for their supply of anthracite coal. In view of the threatened strikes of the Pennsylvania miners, the situation becomes of unusually grave importance to Canadians. It is only when such strikes occur that the public actually realizes how dependent it is upon supplies of United States coal. Again, very few seem to realize the fact that supplies of United States coal, both anthracite and bituminous, may be entirely denied us at any time. Mr. George Otis Smith, of the United States Geological Survey, says: "Let us keep our coal at home and with it manufacture whatever the world needs." Should this happen, could we say that we are prepared to get along without it?

DEPENDENCE ON UNITED STATES FOR ANTHRACITE.

According to a recent estimate, anthracite coal in the United States will be exhausted in less than two-hundred years. Long before that time the cost will increase, and the United States government will see to it that the coal is not exported, but kept at home for its own needs. Let us see to what extent United States coal is sold in Canada. Enquiries sent out by the Commission of Conservation show that the following provinces are supplied with anthracite coal from the United States:—

PROVINCE-COST TO CONSUMER

Nova Scotia	$ 6.50 to $ 7.00
Cape Breton	6.50 to 8.00
Prince Edward Island	6.00 to 6.50
New Brunswick	7.00 to 8.00
Ontario (east of Port Arthur)	6.00 to 7.75
Ontario (west of Port Arthur)	8.00 to 11.00
Manitoba	11.00 to 12.50
Saskatchewan	12.50 to 15.00

OUR BITUMINOUS COAL SUPPLY.

With regard to bituminous coal, Ontario, west of Cornwall, is supplied entirely from the United States. Owing to the low freight rate, Nova Scotia cannot compete with United States coal west of Cornwall. The bituminous coal consumed in Manitoba is almost entirely from the United States, although coal mined in the Crow's Nest and Lethbridge districts finds a ready market in Western Manitoba.

From the above it can be seen that one of the most important questions we have in Canada, at least in the Province of Ontario and the Prairie Provinces, is the question of fuel. The fuel for the Prairie Provinces will necessarily be supplied in the form of coal and briquettes from mines in British Columbia, Alberta, and Saskatchewan. This, however, does not apply to the Province of Ontario, and for economic reasons stated before, Nova Scotia coal cannot find a market in Ontario.—"The Power House," May, 1912.

AMERICAN PEAT SOCIETY CONVENTION.

The sixth annual meeting of the American Peat Society was held in New York on September 5th, 6th and 7th, in connection with the Eighth International Congress of Applied Chemistry.

Dr. Joseph A. Holmes, Director of the Bureau of Mines, Washington, D.C., and President of the Society, presided. His opening address was full of interest, and from its tone it may safely be predicted that the peat industry will have sympathetic treatment at his hands.

Dr. J. Hyde Pratt, State Geologist of North Carolina, in an excellent paper reviewed the work being carried on in that State in reclamation of swamps, whereby eventually enormous areas of swamp land will be rendered suitable for agriculture or made available for industrial purposes. Upon motion by Dr. Pratt, subsequent to discussion of his paper, a resolution was unanimously passed urging upon Congress to set aside an appropriation for the purpose of locating, defining, and accurately mapping the swamp lands of the Eastern States as a preliminary to inauguration of concerted action for reclamation and improvement of same.

Professor W. R. Beattie, of the United States Department of Agriculture, made an able presentation of the great agricultural value of the peat bogs of the United States. A very interesting and practical paper on the best methods and machinery for gathering peat and preparing it for fuel on a large commercial scale was read by Dr. T. Arthur Mighill, of Boston, Mass. Dr. Mighill's paper led to a discussion of working methods in which many of the members present joined.

Among the most valuable features of the meeting was a very lucid and thorough description by Mr. B. F. Haanel, Chief Engineer of the Dominion Government Fuel Testing Station at Ottawa, of the work done by the Mines Branch in connection with the development of the peat industry in Canada. This included an account of the operations of the Government's demonstration plant at Alfred, Ontario, where air-dried peat fuel has been successfully manufactured with an Anrep plant for the past two years. He also detailed fully the experiments carried on at the Fuel Testing Station during the same period in utilization of peat fuel for the production of power by means of a gas-producer plant.

Mr. Ernest V. Moore, of Peterborough, Ontario, described a new plant for manufacture of peat fuel on a large commercial scale which has been erected during the past summer on the Canadian Government peat bog at Alfred, Ontario. This plant includes a new and improved mechanical excavator of

large capacity designed by the late Aleph Anrep, and other novel features which promise to be of very great practical value. Although it was late in the season when the plant was fully installed, it is confidently expected that next year's operations will show highly satisfactory commercial results.

A very comprehensive display of the by-products of peat recoverable by distillation, was shown by Mr. James E. Smith, of Clinton, Iowa.

Professor Chas. A. Davis, Fuel Technologist of the United States Bureau of Mines, and Editor-in-Chief of the Journal of the American Peat Society, reviewed the progress of the peat industry in 1911, and initiated a discussion of ways and means of improving the Journal of the Society, in which many members took part. The Journal has made for itself a recognized position with the scientific and technical press, and is deserving of a greater measure of financial support.

All papers, discussions, and transactions will be fully reported in the columns of the Journal of the American Peat Society.

At the close of the proceedings the members visited the plant at Alphano, N. J., where they inspected a large peat fertilizer filler plant in operation. The Alphano plant manufactures from 100 to 150 tons of finished product per day of 24 hours, and has many valuable practical features in the handling of peat. Several hundred acres of bog lands planted with celery and onions gave the visitors a splendid object lesson on the successful combination of agricultural utilization of peat bogs with their industrial development.

The place of holding the next annual meeting was left to be decided by the executive committee, three cities being named, viz.: Chicago, Ill., St. Augustine, Fla., and Montreal, Canada.

Arrangements were perfected for incorporation of the Society.

The following officers were elected for the ensuing year:—

President: John N. Hoff, 17 Battery Place, New York.

1st Vice-President: Dr. T. Arthur Mighill, 15 Exchange Street, Boston, Mass.

2nd Vice-President: Carl Kleinstueck, Kalamazoo, Michigan.

Secretary-Treasurer: Julius Bordollo, Kingsbridge, New York City.

Executive Committee: G. Herbert Condict, 922 Central Ave., Plainfield, N. J.; Dr. Chas. F. McKenna, 50 Church Street, New York; Dr. J. McWilliam, London, Ont., Canada; Dr. Herbert Philipp, Perth Amboy, N. J.; Robert Ransom, St. Augustine, Florida.

PEAT PRODUCTION.

In European countries, where labor is cheap, peat fuel has been produced for many years. In Canada, where labor is expensive, development of the peat industry has been retarded on account of the cost of production.

The history of the many attempts made on the continent of America to produce peat fuel indicates "failure after failure." But persistent effort was bound ultimately to meet with its reward; experience taught that hand labor must be replaced by machinery and that natural instead of artificial methods of drying were preferable. The result is that to-day peat fuel is produced commercially, and although improvements must and will be made, still the methods now employed give a product that will compare favorably with the best coals on the market, and if taken on a B. T. U. test might be found to beat some of them.

The complaint that peat fuel is too bulky for shipment no longer holds good, as from twenty-five to thirty tons can easily be loaded into an ordinary freight car. For the railroad companies the freighting of peat is more satisfactory than other fuels, as being cleanly to handle. Any kind of cars can be used and, being available for return freight, are not hauled back empty as in the case of coal cars. The fuel stands handling well, consequently open cars can be used for transportation.—The Canadian Mining Journal.

BY-PRODUCT GAS-PRODUCERS.

Most American inventors of gas-producers have endeavored to produce tar-free gas from bituminous coal. Some have been quite successful and others have produced gas heavily charged with lampblack, which has proved very troublesome around gas-producers and engines.

The United States Steel Corporation is said to be producing coke at one of its new plants for almost nothing, the gas and by-products practically paying for the coal and the cost of the coking process.

A large Mond gas-producer plant has been in operation at Dudley Port, near Birmingham, England, for several years, from which the by-products, tar and ammonium sulphate, are recovered and sold. The gas is distributed through mains over a considerable area and practically no trouble has been experienced with tar in the distributing system, doubtless due to the careful and thorough washing given the gas after it leaves the producer. It has always been objected that such a process could not succeed in America, owing to the difficulty of disposing of the by-products. The American farmer is as progressive as any in the world, and when he learns the advantages of

ammonium sulphate as a fertilizer, the demand for this material will increase rapidly. The plant of the Steel Corporation already referred to seems to have no difficulty selling its by-products.

Tar, usually considered a waste, may prove one of the most valuable of all by-products. The success attained in Europe in using tar-oils and even moderately thick tar as a fuel for Diesel engines opens up a wide field for this waste product.

European engineers have shown what can be done in developing new processes and utilizing new equipment, as, for instance, the producers and Diesel engines already mentioned. It is now time for an American engineer to design and build a producer-gas central station for one of our large cities. The by-products from the bituminous coal could be saved and the ammonium sulphate marketed. The tar would be treated and such portions saved as can be used for fuel for Diesel engines. These engines could be located in sub-stations and used only to carry the peak loads. The residue of heavy tar substances might be put into stills and subjected to a cracking process until all that remains is a coke which could be returned to the producer. Such a process would make available many cheap grades of bituminous coal and would entirely stop the smoke nuisance. While many difficulties would have to be overcome, none are beyond our present engineering ability. Such a plant would probably occupy much larger floor space than a corresponding steam plant, but it could be located outside the city proper and the gas piped to large holders near the power plants. These plants could be located to minimize the distribution losses. By providing Diesel engines for peak loads, the central producer-plant could operate steadily at nearly one hundred per cent. load factor. This economy of operation, with the high thermal efficiency of the gas engine itself, should make such a station highly profitable, even though the first costs may exceed those of a steam-turbine power plant of equal capacity. The problems involved in such an undertaking are exceedingly intricate, but the possibilities warrant very careful consideration by our engineers.

THE PRODUCER-GAS ENGINE AS A FACTOR IN CONSERVATION.

The finding of new or broader uses for a heretofore useless or little-used material as cheaper substitute for some other substance constitutes the ideal conservation. At the present time the efforts of conservationists are directed to means for prolonging the life of our fuel supplies. Statisticians have already placed a short time limit for the life of the Pennsylvania anthracite coal field, and a longer one for the supplies of bituminous coals. The most effective way of conserving these fuels is not by forbidding their use, but by reducing the losses of energy in the generation of power, and by utilizing cheaper substitutes for them in sections where the latter are available.

The gas engine operated by producer gas furnishes an efficient means for conserving fuels by making available for power generation such low-grade fuels as peat, lignite, and low-grade coals, waste gases and even corn-stalks; in fact, almost any low-grade combustibles or wastes, which are practically valueless for steaming purposes.

Investigations have been carried on by the United States Government to determine the value of producer-gas-operated gas engine as a fuel conserver. The results of these investigations have been published by the Bureau of Mines, as Technical Paper No. 9, "The Status of the Gas-Producer and of the Internal Combustion Engine in the Utilization of Fuels."

According to that paper the tests made showed that coals consumed in producer-gas plants develop about two and one-half times the power that the same coals would develop in the ordinary steam-boiler plant, and that certain low-grade lignites will develop, when converted into producer-gas as much power as some of the high-grade bituminous coals when burned under a steam boiler. This is equivalent to transforming a low-grade fuel into a high-grade fuel, with other important advantages added.

It is stated that the yearly saving made by the United States Steel Corporation in generating power from blast furnace gases by means of gas engines, amounts to approximately 1,000,000 tons of coal.

It is further pointed out that, as producer-gas is smokeless, it will become an important factor in eliminating the smoke nuisance, which follows the use of soft coals under boilers.—"Mining and Engineering World," August 17, 1912.

PEAT IN NEW ONTARIO.

"As regards peat, it abounds everywhere, even on the height of land, and, while it detracts greatly from the value of the country from an agricultural point of view, burying, as it has done, millions of acres of fertile soil which might otherwise have been easily reclaimed and cultivated, I am, notwithstanding, still firmly of opinion that this inexhaustible supply of fuel will, at no distant day, be turned to account, and prove of inestimable value to the people of Canada, and more particularly of our own province."

"I stated in my report last year that I believed that not less than 10,000 square miles of territory claimed by Ontario, north of the Height of Land, was overlaid by beds of peat. I am persuaded that the area will eventually be found greatly to exceed that estimate.

(Extract from Report of E. B. Borron (1882) on that Part of the Basin of Hudson's Bay Belonging to the Province of Ontario.)

ELECTRICITY FROM PEAT.

European engineers are engaged in the investigation of methods of utilizing peat as fuel in electric stations. Southern Bavaria, for instance, has vast fields which would serve to run electric plants of large size and this would give a great reserve of power. The peat bogs lie mainly in the region of the Danube, and are estimated to cover an area of 500 square miles. Supposing the peat layer to be only three feet in thickness and the cubic foot of peat to afford but three pounds of fuel, this will mean a supply of fifty million tons. The fuel can be burned under boilers, or it can be used in special producers to secure a supply of gas for industrial purposes.

INDEX TO VOL. 1

	No.	Page.
Address by Hon. Clifford Sifton	1	3
Alfred peat bog	2	33
Operation of government peat plant at, 1911	1	33
Proposed commercial peat plant at,	1	33
Alfred peat, Results of tests made in Korting gas producer with	3-4	25
American Peat Society. Kalamazoo Convention, Sept 21-23, 1911	1	34
New York Convention, Sept. 5-7, 1912	3-4	56
Anrep Aleph, Biographical sketch by Alf Larson	2	3
Anrep Aleph, Jr., "European Peat Societies"	1	23
Anrep, Improved machinery for manufacture of machine peat	1	14
Arnaud, E. D., Extract from report of	2	32
Artificial drying of peat	2	29
Borron, E. B., Extract from report of	3-4	61
Brockville peat bog	2	33
Brunner peat bog	2	33
Bulletin 16, United States Bureau of Mines	2	14
Coal, Canada's Supply of, "The Power House."	3-4	54
Statistics 1892,-1911 Imports, Consumption and Production by Provinces	3-4	53
Commercial utilization of peat for power purposes	3-4	28
Commission of Conservation, Resolution regarding investigations	2	28
Davis, Charles A. "The Uses of Peat for Fuel and other purposes"	2	14
Diesel engines, Present status of	3-4	35
Tar oil as fuel for	3-4	33
Dorchester plant for manufacture of peat briquettes, The	1	13
Drying peat by artificial heat	2	29
Editorial	1	27
	2	24
	3-4	45
Electricity from peat	3-4	61
European Peat Societies. Aleph Anrep, Jr.,	1	23
Dr. Hjalmar von Feilitzen	2	7
European Peat Gas Producer Plants, Proposed investigation of	2	30
European Power Plant Practice by Francis G. Wickware	3-4	33
Exhaust gases, Utilization of heat of	3-4	12
Farnham peat, Results of tests with in Korting gas producer	3-4	26
Farnham peat plant	1	33
	2	21
Fertiliser, Peat as a	2	31
Fertilisers, Imports into Canada of	2	31
	3-4	39
Freight rates on peat fuel	1	28

Gas Producer, (The), and the internal combustion engine	3-4	37
Gladding, Thos. S., A.M. "Peat as an agricultural asset"	3-4	39
Government peat plant at Alfred, operation 1911	1	33
Haanel, B. F., B. Sc.		
The Peat Producer Gas Power Plant at the Government Fuel Testing Station	1	8
Abstract of Report on the utilization of Peat Fuel for the production of power	3-4	3
Tar separator devised by	3-4	15
Holland, The peat industry in	2	17
Imports of coal into Canada (1892-1911)	3-4	53
Investigation of European peat gas producer plants (Proposed)	1	35
	2	30
	3-4	46
Komoka peat bog	2	33
Korting Gas Producer		
Description of plant at government fuel testing station	3-4	7
Principle of operation of	3-4	11
Summary of results of tests	3-4	23
Larson, Alf.		
Aleph Anrep, a biographical sketch	2	3
Peat fuel in Sweden	1	30
Machine Peat, Improved Anrep machinery for manufacture of	1	14
McWilliam, J., M.D.		
The Dorchester plant for manufacture of peat briquettes	1	13
Mer Bleue peat bog	2	33
Moore Ernest V., B. Sc., A.M. Can. Soc. C. E.		
The improved Anrep machinery for the manufacture of machine peat	1	14
Moss litter	2	19
	2	32
Newfoundland Peat Bounty Act	1	29
Newington peat bog	2	33
New members	2	35
New Ontario, peat in	3-4	61
Ontario peat bogs	2	33
Patents relating to peat	2	34
	3-4	49
Peat as a fertiliser	2	31
as an agricultural asset	3-4	39
briquettes, Dorchester plant for manufacture of	1	13
bogs of Ontario	2	33
Bounty Act, (Newfoundland)	1	29
dust	2	32
fire lighters	2	32
for fuel and other purposes, The utilization of	2	14
fuel in Sweden	1	30
fuel for power production	3-4	3
industry in Holland	2	17
in New Ontario	3-4	61
production (Can Mining Jour. ed.)	3-4	58
Peat Industries, Ltd	1	33
	2	21
Peat Producer Gas Power Plant at Fuel Testing Station	1	8

Pegg, H. V. "Commercial utilization of peat for power purposes"	3-4	28
Perth peat bog	2	33
Petition for investigation of European Peat Gas Producer Plants	2	30
Portadown, Ireland, peat power plant	2	10
Paper by H. V. Pegg on	3-4	28
Power production, Utilization of peat for	2	10
Abstract of B. F. Haanel's report	3-4	3
Can. Mining Jour., ed.	3-4	38
Proposed government investigation	1	35
	2	30
	3-4	46
Proceedings of Canadian Peat Society	1	25
Production of coal by Provinces	3-4	53
Rondeau peat bog	2	33
Sifton, Hon. Clifford, Address before American Peat Society	1	3
Remarks at annual meeting of the Commission of Conservation	2	27
Sweden, Peat fuel in	1	30
Tables:—Coal Statistics	3-4	53
Imports of fertilisers into Canada	2	31
Ontario peat bogs examined, 1910-1911	2	33
Patents relating to peat, 1910-1911	2	34
Weights of water evaporated from one ton of peat	2	29
Tar oil as fuel for Diesel engines	3-4	33
Tar Separator devised by B. F. Haanel	3-4	15
Tests made with Korting Peat Gas Producer	3-4	23
Victoria Road peat bog	2	33
Von Feilitzen, Dr. Hjalmar, "European Peat Societies"	2	7
Welland peat bog	2	33
Wickware, Francis G., "European Power Plant Practice"	3-4	33

Vol. 1 NOVEMBER, 1911 No. 1

JOURNAL

OF THE

CANADIAN PEAT SOCIETY

Published Quarterly by the Society

Subscription Price $1 per annum
Single Number, Twenty-five cents

OTTAWA, CANADA